USDA United States Department of Agriculture
Foreign Agricultural Service

GAIN Global Agricultural Information Network

Voluntary Report – Voluntary - Public Distribution **Date:** October 30, 2026

Report Number: CH2026-0133

Report Name: China Publishes Amendments to Select Food Additive Standards

Country: China - People's Republic of

Post: Beijing

Report Category: FAIRS Subject Report, Sanitary/Phytosanitary/Food Safety

Prepared By: FAS China staff

Approved By: Joshua Demoss

Report Highlights:

On September 22, the National Health Commission (NHC) and the State Administration of Market Regulation (SAMR) released amendments to several existing national food safety standards on food additives. These revised standards went into force on August 18, 2026. This report provides unofficial translation of ten food additive standards and their amendments. Stakeholders should conduct their own review of the regulations to assess any market or regulatory impacts on their business.

THIS REPORT CONTAINS ASSESSMENTS OF COMMODITY AND TRADE ISSUES MADE BY USDA STAFF AND NOT NECESSARILY STATEMENTS OF OFFICIAL U.S. GOVERNMENT POLICY

FAS China provides this reporting and analysis as a service to U.S. farmers, ranchers, rural communities, and agribusinesses in support of a worldwide agricultural information system and a level playing field for U.S. agricultural products.

General Information

On September 22, the National Health Commission of the People's Republic of China (NHC) and the State Administration for Market Regulation (SAMR) jointly announced amendments to several national food safety standards for food additives. According to the announcement, these revised standards officially came into force on their approval date of August 18, 2026.

This report outlines specific amendments for ten national food additive standards and provides an unofficial translation for each. The ten food additives covered include D-Mannitol, Sorbitol and Sorbitol Solution, Brilliant Blue, Ponceau 4R, Allura Red, Xylitol, Amaranth, Tartrazine, Sunset Yellow, and Maltitol Solution. Stakeholders should conduct their own review of the regulations to assess any market or regulatory impacts on their business.

BEGIN UNOFFICIAL TRANSLATION

1. Amendment to GB 1886.177—2016 National Food Safety Standard — Food Additive: D-Mannitol

Amendment item:

Add the following "note" to Table 2 under "3.2 Physicochemical Indicators"

"Note: D-mannitol products sold as products shall comply with the D-mannitol raw-material requirements of this Standard. Food additives such as silicon dioxide and hydrogenated rosin glycerol ester that comply with the relevant standards and/or quality specifications for food raw materials and/or food additives under the applicable food safety national standards may be added. In addition to loss on drying and residue on ignition, the other indicators of the product shall comply with the requirements of this Standard."

GB 1886.177—2016 National Food Safety Standard Food Additive — D-Mannitol

Issued on: 31 August 2016

Implemented on: 1 January 2017.

1 Scope

This Standard applies to the food additive D-mannitol manufactured using starch, starch sugar, or sucrose as raw material.

2 Structural formula, molecular formula and relative molecular mass

2.1 Structural formula

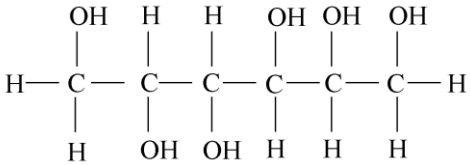

2.2 Molecular formula

$C_6H_{14}O_6$

2.3 Relative molecular mass

182.17 (based on the 2011 relative atomic masses).

3 Technical requirements

3.1 Sensory requirements

Sensory characteristics shall comply with Table 1.

Table 1. Sensory Characteristic

Item	Requirement	Test method
Color	White	Take an appropriate amount of sample and place it in a clean, dry white porcelain dish; observe the colour and appearance under natural light and assess its taste.
Appearance/state	Crystalline powder or granules	Same as above
Taste	Slightly sweet	Same as above

3.2 Physicochemical indicators

Physicochemical indicators shall comply with Table 2.

Table 2. Physicochemical Indicator

Item	Indicator	Test method
D-mannitol content (on an anhydrous basis), w/%	96.0–101.5	A.3 of Annex A
Loss on drying, w/%	≤ 0.3	Direct drying method in GB 5009.3[a]
pH (100 g/L solution)	4.0–7.5	GB/T 9724
Residue on ignition, w/%	≤ 0.1	A.4 of Annex A
Reducing sugar, w/%	≤ 0.3	A.5 of Annex A

Nickel (Ni), mg/kg	≤ 1.0	GB 5009.138
Lead (Pb), mg/kg	≤ 1.0	GB 5009.75 or GB 5009.12

[a] Drying temperature: 105 °C ± 2 °C; drying time: 4 h.

Annex A (Normative)

Test methods

A.1 General provisions

Unless otherwise specified, the reagents and water used in this Standard are analytical-grade reagents and Grade 3 water as specified in GB/T 6682. Standard solutions, impurity standard solutions, preparations and products used in tests shall, unless otherwise specified, be prepared in accordance with GB/T 601, GB/T 602 and GB/T 603. Where no solvent is specified for a solution, water should be used.

A.2 Identification tests

A.2.1 Color reaction

Weigh an appropriate amount of sample and prepare a sample solution at 13.3 g/L. Place 3 mL in a 15 mL test tube, add 3 mL of freshly prepared 100 g/L catechol solution and mix. Then add 6 mL of sulfuric acid and mix. Heat the tube gently over a flame for 30 s. The solution should become dark green or wine-red.

A.2.2 Chromatographic test

In the test for D-mannitol content, the retention time of the main peak in the chromatogram of the sample solution shall agree with that of the main peak in the chromatogram of the standard solution.

A.3 Determination of D-mannitol content (on an anhydrous basis)

A.3.1 Reagents and materials

A.3.1.1 Sorbitol reference standard: purity ≥ 98%.
A.3.1.2 D-mannitol reference standard: purity ≥ 99%.

A.3.2 Instruments and equipment

High-performance liquid chromatograph equipped with a differential refractive-index detector, or an equivalent detector.

A.3.3 Reference chromatographic conditions

A.3.3.1 Column: strongly basic anion-exchange resin with styrene-based matrix, for sugar/sugar alcohol analysis, 7.8 mm × 30 cm, or equivalent.
A.3.3.2 Mobile phase: Grade 1 water specified in GB/T 6682.
A.3.3.3 Column temperature: 80 °C.

A.3.3.4 Detector temperature: 35 °C–55 °C.
A.3.3.5 Flow rate: 0.5 mL/min.
A.3.3.6 Injection volume: 20 μL.

A.3.4 Analytical procedure

A.3.4.1 Preparation of resolution solution

Weigh appropriate amounts of sorbitol reference standard and D-mannitol reference standard and prepare a solution containing 4.8 g/L of each.

A.3.4.2 Preparation of standard solution

Weigh 0.5 g of D-mannitol reference standard (accurate to 0.0001 g) into a 100 mL volumetric flask. Dissolve with the mobile phase, dilute to volume and mix. Filter through a 0.45 μm microporous membrane before chromatographic analysis.

A.3.4.3 Preparation of sample solution

Weigh 0.5 g of sample (accurate to 0.0001 g) into a 100 mL volumetric flask. Dissolve with the mobile phase, dilute to volume and mix. Filter through a 0.45 μm microporous membrane before chromatographic analysis.

A.3.4.4 System suitability test

A.3.4.4.1 When the resolution solution is chromatographed, the resolution between the sorbitol and D-mannitol peaks shall be $R \geq 2.0$.
A.3.4.4.2 When the standard solution is chromatographed, make at least two replicate injections; the relative standard deviation of the results shall be ≤ 2.0%.

A.3.5 Determination

Under the reference chromatographic conditions in A.3.3, separately analyze the standard solution and sample solution, and record the peak areas of D-mannitol in the standard solution and sample solution.

A.3.6 Calculation of results

The mass fraction of D-mannitol (on an anhydrous basis), w_1, is calculated using Formula (A.1):

$$w_1 = [A_u \times c_s \times 100 / (A_s \times c_u \times (100 - w))] \times 100\% \quad (A.1)$$

Where:
A_u — D-mannitol peak area in the sample solution;
c_s — concentration of the standard solution, in g/mL;
100 — conversion factor;
A_s — D-mannitol peak area in the standard solution;
c_u — concentration of the sample solution, in g/mL;
w — loss on drying of the sample, in g/100 g.

The arithmetic means of the results of parallel determinations is reported. Under repeatability conditions, the absolute difference between two independently obtained results shall not exceed 0.5%.

A.4 Determination of residue on ignition

A.4.1 Reagent and material

Sulfuric acid.

A.4.2 Instruments and equipment

A.4.2.1 Crucible.
A.4.2.2 High-temperature furnace.
A.4.2.3 Desiccator.

A.4.3 Procedure

Weigh 1 g of sample (accurate to 0.0001 g) into a crucible previously ignited to constant mass. Char gently on an electric hotplate until completely carbonized, cool to room temperature, and add 0.5 mL sulfuric acid to moisten the residue. Heat gently until the sulfuric acid fumes have been driven off completely. Transfer to a high-temperature furnace and ignite at 800 °C ± 25 °C until completely ashed. Transfer to a desiccator, cool to room temperature, weigh accurately, and ignite again to constant mass.

A.4.4 Calculation of results

The mass fraction of residue on ignition, w_2, is calculated using Formula (A.2):

$$w_2 = [(m_1 - m_0) / m] \times 100\% \quad \text{(A.2)}$$

Where:
m_1 — combined mass of the crucible and residue, in grams (g);
m_0 — mass of the crucible, in grams (g);
m — mass of the sample, in grams (g).

The arithmetic means of the results of parallel determinations is reported. Under repeatability conditions, the absolute difference between two independently obtained results shall not exceed 0.02%.

A.5 Determination of reducing sugars

A.5.1 Reagents and materials

A.5.1.1 Alkaline copper citrate test solution: dissolve 2.5 g copper sulfate, 5.0 g citric acid and 14.4 g anhydrous sodium carbonate in water and dilute to 100 mL.
A.5.1.2 Acetic acid solution: 2 + 81.
A.5.1.3 Iodine standard solution: $c(\frac{1}{2} I_2) = 0.05$ mol/L.
A.5.1.4 Hydrochloric acid solution: 6 + 94.

A.5.1.5 Sodium thiosulfate standard titration solution: $c(Na_2S_2O_3) = 0.05$ mol/L.
A.5.1.6 Starch indicator solution: 10 g/L.

A.5.2 Procedure

Weigh 3.3 g of sample and add 25 mL water; warm gently to dissolve. After cooling, add 20 mL alkaline copper citrate test solution and several glass beads. Heat the solution to boiling; after approximately 4 min, boiling should begin, and maintain boiling for 3 min. After boiling, add 100 mL acetic acid solution and 20.0 mL iodine standard solution, and shake to dissolve the precipitate. If the precipitate does not dissolve, add hydrochloric acid solution dropwise until it dissolves. Titrate the excess iodine with sodium thiosulfate standard solution. Near the endpoint, add 2 mL starch indicator solution. If the volume of sodium thiosulfate standard solution required for titration is at least 12.8 mL, the reducing sugar content is ≤ 0.3%.

END UNOFFICIAL TRANSLATION

2. Amendment to GB 1886.187—2016 National Food Safety Standard – Food Additives: Sorbitol and Sorbitol Solution

Amendment item:

Add the following “Note” to Table 2 under “3.2 Physicochemical Requirements”

"Note: Commercial sorbitol products shall be produced using sorbitol that complies with this standard as a raw material; silicon dioxide—a food additive that meets the requirements of the relevant national food safety standards—may also be added. For such commercial products, all indicators—except for 'residue on ignition'—must comply with the requirements specified in this standard."

BEGIN UNOFFICIAL TRANSLATION

GB 1886.187-2016 National Food Safety Standard Food Additives: Sorbitol and Sorbitol Solution

Date of Publication: August 31, 2016

Date of Implementation: January 1, 2017

Issued by: National Health and Family Planning Commission of the People's Republic of China

Foreword

This standard replaces GB 29219-2012 "National Food Safety Standard - Food Additive Sorbitol" and GB 7658-2005 "Food Additive Sorbitol Solution".

Compared with GB 29219-2012 and GB 7658-2005, the main changes in this standard are as follows:

- The standard title was modified to "National Food Safety Standard - Food Additives: Sorbitol and Sorbitol Solution".
- The scope was modified.
- Sensory requirements were modified.
- The solid content index of sorbitol solution and the total sugar index of sorbitol were modified.
- Arsenic, heavy metals, pH, and relative density indicators were deleted from the physicochemical indicators.
- Benedict's titration method for the determination of reducing sugars was added.
- Some contents of the test methods were modified.

1. Scope

This standard applies to food additive sorbitol solution produced from starch milk or starch processed from plants such as corn through hydrolysis, refining to produce glucose, hydrogenation under the action of a catalyst, and subsequent refining and concentration processes; as well as food additive sorbitol produced by further concentration, drying, sieving, and other processes from sorbitol solution.

2. Molecular Formula, Structural Formula, and Relative Molecular Mass

2.1 Molecular Formula

$$C_6H_{14}O_6$$

2.2 Structural Formula

$$CH_2OH(CHOH)_4CH_2OH$$

(As shown structurally in the text: $H-C(OH)-C(OH)-C(OH)-C(OH)-C(OH)-H$ *with associated hydrogens)*

2.3 Relative Molecular Mass

182.17 (according to the 2007 international relative atomic masses).

3. Technical Requirements

3.1 Sensory Requirements

Sensory requirements shall comply with the provisions of Table 1.

Table 1: Sensory Requirements

Item	Index	Test Method
	Sorbitol	Sorbitol Solution
Color	White	Colorless and transparent
State	Powder, flakes, or granules, hygroscopic	Viscous liquid

3.2 Physicochemical Indicators

Physicochemical indicators shall comply with the provisions of Table 2.

Table 2: Physicochemical Indicators

Item	Index	Test Method
	Sorbitol	Sorbitol Solution
Sorbitol content $w/\% \geq$	91.0 (calculated on a dry basis)	50.0
Moisture, $/\% \leq$	1.5	31.0
Reducing sugars (calculated as glucose), $w/\% \leq$	0.3	0.21
Total sugars (calculated as glucose), $w/\% \leq$	4.4	8.0
Residue on ignition, $w/\% \leq$	0.1	0.1
Sulfates (calculated as SO_4) / (mg/kg) $\leq$	100	50
Chlorides (calculated as Cl) / (mg/kg) $\leq$	50	10
Nickel (Ni) / (mg/kg) $\leq$	2.0	2.0
Lead (Pb) / (mg/kg) $\leq$	1.0	1.0

(Note for moisture determination: Weigh about 1 g of sample, accurate to 0.0002 g, and dry at $130°C \pm 2°C$ for 4 h).

APPENDIX A

Test Methods

A.1 General Provisions

Unless otherwise specified, the reagents and water used in this standard refer to analytically pure reagents and grade 3 water specified in GB/T 6682. Standard titration solutions, standard solutions for impurity determination, preparations, and products used in tests, unless otherwise specified, are prepared in accordance with GB/T 601, GB/T 602, and GB/T 603. Unless otherwise specified, the solutions used in the tests refer to aqueous solutions.

A.2 Identification Test

In the sorbitol content determination test, the retention time of the main peak in the chromatogram of the sample solution shall be consistent with that of the main peak in the chromatogram of the standard solution.

A.3 Determination of Sorbitol Content

A.3.1 Principle

Using high-performance liquid chromatography (HPLC), under selected working conditions, water is used as the mobile phase. The components in the sample solution are separated through a chromatographic column, detected with a refractive index detector, and the chromatographic signals are recorded and processed by a data processing system.

A.3.2 Reagents and Materials

- A.3.2.1 Water: Grade 1 water complying with GB/T 6682.
- A.3.2.2 Sorbitol standard sample: Mass fraction $\geq$ 98.0%.

A.3.3 Instruments and Equipment

High-performance liquid chromatograph: equipped with a refractive index detector.

A.3.4 Reference Chromatographic Conditions

- A.3.4.1 Mobile phase: Water (A.3.2.1), filtered through a 0.22 μm microporous membrane filter, and ultrasonically degassed for later use.
- A.3.4.2 Chromatographic column: An analytical column dedicated to the analysis of sugars and sugar alcohols using a calcium-type strongly acidic cation exchange resin as the packing, column length 300 mm, column inner diameter 7.8 mm, or other equivalent chromatographic columns.
- A.3.4.3 Column temperature: 70°C ~ 90°C, and temperature fluctuation shall be controlled not to exceed 1°C.

- A.3.4.4 Mobile phase flow rate: 0.5 mL/min ~ 1.0 mL/min.
- A.3.4.5 Injection volume: 20 μL.

A.3.5 Analysis Procedures

- A.3.5.1 Preparation of standard solution: Weigh 5.0 g of sorbitol standard sample, accurate to 0.0002 g, into a 100 mL volumetric flask, dissolve with mobile phase, dilute to the mark, and mix well. Filter through a 0.45 μm microporous membrane filter before chromatographic analysis.
- A.3.5.2 Preparation of sample solution: Weigh 5.0 g of sample, accurate to 0.0002 g, into a 100 mL volumetric flask, dissolve with mobile phase, dilute to the mark, mix well, and filter through a 0.45 μm microporous membrane filter before chromatographic analysis.

A.3.6 Determination

- A.3.6.1 External standard method (arbitration method): Under the reference chromatographic conditions in A.3.4, perform chromatographic analysis on the standard solution and sample solution respectively, and record the peak area A_s of sorbitol in the standard solution and the peak area A_u of sorbitol in the sample solution.
- A.3.6.2 Area normalization method: Under the reference chromatographic conditions in A.3.4, perform chromatographic analysis on the sample solution, and record the peak area of each chromatographic peak. Based on the peak areas, calculating the mass fraction of sorbitol by the area normalization method.

A.3.7 Calculation of Results

- A.3.7.1 External standard method (arbitration method): The mass fraction of sorbitol content is calculated according to formula (A.1):

$$w_1 = \frac{A_u \times m_s \times w_s}{A_s \times m_u} \times 100\%$$

Where:

- A_u — Peak area of sorbitol in the sample solution;
- m_s — Mass of the sorbitol standard sample, in grams (g);
- w_s — Mass fraction of sorbitol in the standard sample, %;
- A_s — Peak area of sorbitol in the standard solution;
- m_u — Mass of the sorbitol solution sample, or the dry-basis mass of the sorbitol sample, in grams (g).

The test result takes the arithmetic means of parallel determination results. The absolute difference between two independent determination results obtained under repeatability conditions is not greater than 0.5%.

- A.3.7.2 Area normalization method: The mass fraction of sorbitol content is calculated according to formula (A.2):

$$w_1 = \frac{A_u}{A_{\text{sum}}} \times 100\%$$

Where:

- A_u — Peak area of sorbitol in the sample solution;
- A_{sum} — Total peak area of all peaks in the sample solution.

The test result takes the arithmetic means of parallel determination results. The absolute difference between two independent determination results obtained under repeatability conditions is not greater than 0.5%.

A.4 Determination of Reducing Sugars (Calculated as Glucose)

A.4.1 Benedict's Titration Method

- A.4.1.1 Principle: Reducing sugars in the sample react with divalent copper ions in Benedict's reagent to produce red cuprous oxide; cuprous oxide is oxidized when meeting iodine and turns back into divalent copper ions, excess iodine is titrated with sodium thiosulfate, and the reducing sugar content is calculated based on the iodine consumed by the oxidation reaction.
- A.4.1.2 Reagents and Solutions:
    - A.4.1.2.1 Hydrochloric acid solution: 1 mol/L. Measure 84 mL of hydrochloric acid (37%), dissolve and dilute to 1000 mL.
    - A.4.1.2.2 Iodine standard solution: $c\left(\frac{1}{2}\mathrm{I}_2\right) = 0.04$ mol/L. Weigh 7.2 g of potassium iodide and 5.0762 g of iodine to make 1000 mL of solution, store in a brown bottle (use after standing for 24 h and shaking well).
    - A.4.1.2.3 Sodium thiosulfate standard titration solution: $c(\mathrm{Na_2S_2O_3}) = 0.04$ mol/L.
    - A.4.1.2.4 Acetic acid solution: 5%.
    - A.4.1.2.5 Phenolphthalein indicator solution: 10 g/L.
    - A.4.1.2.6 Starch indicator solution: 10 g/L.
    - A.4.1.2.7 Benedict's reagent: Add 16 g of copper sulfate ($\mathrm{CuSO_4 \cdot 5H_2O}$) to 150 mL of water, stir to dissolve, this is Solution A. In 650 mL of water, successively add 150 g of trisodium citrate, 130 g of anhydrous sodium carbonate, and 10 g of sodium bicarbonate, and heat to dissolve, this is Solution B. Mix cooled Solution A and Solution B, dilute to 1000 mL with water, filter, and use after aging for 24 h.
- A.4.1.3 Procedure: Weigh 3.3 g of sorbitol sample or 5 g of sorbitol solution sample, accurate to 0.001 g, into a 250 mL conical flask, add 20 mL of Benedict's reagent, add a few glass beads, heat and control the temperature to boil exactly within 4 min $\pm$ 0.25 min, continue boiling for 3 min (timed accurately) and rapidly cool with tap water. First add 50 mL of water to the conical flask, then add 50 mL of acetic acid solution, use a pipette to accurately add 20 mL of iodine standard solution, add 25 mL of hydrochloric acid solution, shake thoroughly to completely dissolve the red precipitate, back-titrate the excess iodine with sodium thiosulfate standard titration solution. Near the endpoint

(turning from brownish black to bluish green), add about 5 drops of starch indicator solution, and continue titration until the color turns bright blue as the endpoint. Take 5 mL of water to perform a blank test according to the above operation procedure and record the volume V_0 of the sodium thiosulfate standard solution consumed by the blank test.

- A.4.1.4 Expression of Results: The mass fraction of reducing sugars (calculated as glucose) is calculated according to formula (A.3):

$$w_2 = \frac{(V_0 - V_1) \times c \times 0.112}{0.04 \times m} \times 100\%$$

Where:

- V_0 — Volume of sodium thiosulfate standard titration solution consumed in the blank test, in milliliters (mL);
- V_1 — Volume of sodium thiosulfate standard titration solution consumed by the sample, in milliliters (mL);
- c — Concentration of the sodium thiosulfate standard titration solution, in moles per liter (mol/L);
- 0.112 — 0.04 mol/L iodine ($\frac{1}{2}\mathrm{I}_2$) is equivalent to 0.112 g of glucose;
- m — Mass of the sample, in grams (g).

Take the arithmetic mean of two parallel determination results as the determination result, and the absolute difference between the two parallel determination results is not greater than 0.01%.

A.4.2 Potassium Permanganate Titration Method (Arbitration Method)

- A.4.2.1 Principle: Heated under certain temperature, time, and concentration conditions, reducing sugars in the sample are oxidized by excess Fehling's solution to generate cuprous oxide precipitate; cuprous oxide reduces ferric sulfate to ferrous sulfate, and the generated ferrous sulfate is titrated with potassium permanganate standard titration solution. Based on the consumption of potassium permanganate standard titration solution, check the cuprous oxide-glucose conversion table of the permanganate method to obtain the glucose mass, and calculate the content of reducing sugars (calculated as glucose).
- A.4.2.2 Reagents and Materials:
  - A.4.2.2.1 Fehling's solution.
  - A.4.2.2.2 Ferric sulfate solution: 50 g/L. Weigh 50 g of ferric sulfate, add 200 mL of water to dissolve, slowly add 100 mL of sulfuric acid, mix, cool, and dilute with water to 1000 mL.
  - A.4.2.2.3 Potassium permanganate standard titration solution: $c\left(\frac{1}{5}\mathrm{KMnO}_4\right) = 0.1$ mol/L.
- A.4.2.3 Instruments and Equipment: Sintered glass crucible: filter plate pore size 5 μm ~ 15 μm (G4).
- A.4.2.4 Procedure:

    - A.4.2.4.1 Weigh 20 g ~ 50 g of sample (determined according to the content of reducing sugars), accurate to 0.0002 g, placed in a 250 mL conical flask already containing a small amount of water.
    - A.4.2.4.2 Add 40 mL of Fehling's solution and a few glass beads, mix thoroughly. Place on an electric furnace to heat, control to boil within 4 min, continue boiling for 3 min, rapidly cool to room temperature, immediately perform vacuum suction filtration with a sintered glass crucible, repeatedly wash the beaker and precipitate with warm water until the filtrate is clear, until the filtrate is not alkaline, discard the filtrate, and clean the suction filtration flask. Add 60 mL of ferric sulfate solution in 3 portions into the sintered glass crucible to fully dissolve the cuprous oxide precipitate, filter with suction, wash the sintered glass crucible several times with water, and collect the filtrate. Titrate the filtrate with potassium permanganate standard titration solution to a slight red color as the endpoint. Record the actual volume V_0 of potassium permanganate standard titration solution consumed.
- A.4.2.5 Calculation of Results:
    - A.4.2.5.1 Conversion of potassium permanganate standard titration solution volume: The conversion volume V_1 of potassium permanganate standard titration solution [$c\left(\frac{1}{5}\mathrm{KMnO_4}\right)$], in milliliters (mL), is calculated according to formula (A.4):

$$V_1 = \frac{V_0 \times c_1}{0.1000}$$

Where:

- V_0 — Volume of potassium permanganate standard titration solution consumed, in milliliters (mL);
- c_1 — Concentration of potassium permanganate standard titration solution, in moles per liter (mol/L);
- 0.1000 — Concentration of potassium permanganate standard titration solution $c\left(\frac{1}{5}\mathrm{KMnO_4}\right) = 0.1000$ mol/L, in moles per liter (mol/L).
    - A.4.2.5.2 Calculation of reducing sugar content (calculated as glucose): The mass fraction of reducing sugars w_3 is calculated according to formula (A.5):

$$w_3 = \frac{m_1}{m \times 1000} \times 100\%$$

Where:

- m_1 — Mass of glucose obtained by checking Table B.1 based on the calculated value of V_1 (A.4.2.5.1), in milligrams (mg);
- m — Mass of the sample, in grams (g);
- 1000 — Conversion factor.

Take the arithmetic mean of two parallel determination results as the determination result, and the absolute difference between the two parallel determination results is not greater than 0.008%.

A.5 Determination of Total Sugars (Calculated as Glucose)

A.5.1 Principle

Under acidic conditions, monosaccharides generated by the hydrolysis of glycans in the sample under heated reflux are oxidized by excess Fehling's solution to generate cuprous oxide precipitate; cuprous oxide reduces ferric sulfate to ferrous sulfate, and the generated ferrous sulfate is titrated with potassium permanganate standard titration solution. Based on the consumption of potassium permanganate standard titration solution, check the cuprous oxide-glucose conversion table of the permanganate method to obtain the glucose mass, and calculate the total sugar content (calculated as glucose).

A.5.2 Reagents and Materials

- A.5.2.1 Sodium hydroxide solution: 400 g/L.
- A.5.2.2 Hydrochloric acid solution: 18 + 100.
- A.5.2.3 Bromocresol green-methyl red indicator solution.

A.5.3 Procedure

Weigh 20 g ~ 50 g of sample (determined according to the total sugar content), accurate to 0.0002 g, and place it in a 500 mL ground-glass conical flask; add 100 mL of hydrochloric acid solution and about 80 mL of water, attach a condenser tube and heat under reflux. Start timing from the beginning of boiling, and continue boiling for 45 min. After cooling, add bromocresol green-methyl red indicator solution, neutralize with sodium hydroxide solution until the pH of the solution is about 7. Transfer to a 250 mL or 500 mL volumetric flask (determine the volumetric flask volume according to the total sugar content), dilute to the mark with water, mix well, and pipette 20.00 mL into a 250 mL conical flask. The subsequent operations are the same as in A.4.2.4.2.

A.5.4 Calculation of Results

- A.5.4.1 The conversion volume V_1 of the potassium permanganate standard titration solution $c\left(\frac{1}{5}\mathrm{KMnO_4}\right) = 0.1$ mol/L is converted the same as in A.4.2.5.1.
- A.5.4.2 The mass fraction of total sugars (calculated as glucose) is calculated according to formula (A.6):

$$w_4 = \frac{m_1}{m \times 1000 \times (20/V_2)} \times 100\%$$

Where:

- m_1 — Mass of glucose obtained by checking Table B.1 based on V_1 (A.4.2.5.1), in milligrams (mg);
- m — Mass of the sample, in grams (g);
- 1000 — Mass conversion factor;
- 20 — Pipetted volume of sample solution, in milliliters (mL);

- V_2 — Volume transferred into the volumetric flask, in milliliters (mL).

Take the arithmetic mean of two parallel determination results as the determination result, and the absolute difference between the two parallel determination results is not greater than 0.08%.

A.6 Determination of Residue on Ignition

A.6.1 Procedure

Take 2 g ~ 5 g of sample, place it in a crucible that has been weighed to constant weight, accurate to 0.0002 g. Slowly ignite on an electric furnace until completely carbonized, cool to room temperature, add a sufficient amount of sulfuric acid to moisten, and heat at low temperature until sulfuric acid vapors are exhausted. Then transfer to a high-temperature furnace, ignite at $800°C \pm 25°C$ to make it completely ashed, and then weigh to constant weight.

A.6.2 Calculation of Results

The mass fraction of residue on ignition is calculated according to formula (A.7):

$$w_5 = \frac{m_1 - m_0}{m_2 - m_0} \times 100\%$$

Where:

- m_1 — Mass of the residue and crucible after ignition, in grams (g);
- m_0 — Mass of the empty crucible, in grams (g);
- m_2 — Mass of the crucible and sample, in grams (g).

The test result takes the arithmetic mean of parallel determination results. The absolute difference between two independent determination results obtained under repeatability conditions is not greater than 0.02%.

A.7 Determination of Sulfates (Calculated as SO_4)

A.7.1 Reagents and Materials

- A.7.1.1 Potassium sulfate standard solution: Accurately weigh 0.181 g of potassium sulfate, add water to dissolve and dilute to volume in a 1000 mL volumetric flask, mix well, and it is ready for use (each 1 mL is equivalent to 100 μg of SO_4).
- A.7.1.2 Hydrochloric acid solution: $10 + 90$.
- A.7.1.3 Barium chloride solution: 250 g/L.

A.7.2 Instruments and Equipment

- A.7.2.1 Analytical balance: readability of 0.01 g.
- A.7.2.2 Nessler colorimetric tube: 50 mL.

A.7.3 Procedure

Weigh 1 g of sample and place it in a Nessler colorimetric tube, add water to dissolve to make 40 mL, add 2 mL of hydrochloric acid solution, mix well, which is the test solution. For sorbitol sample, take another Nessler colorimetric tube, add 1 mL of potassium sulfate standard solution, add water to make 40 mL, add 2 mL of hydrochloric acid solution, mix well, which is the reference solution. For sorbitol solution sample, take another Nessler colorimetric tube, add 0.5 mL of potassium sulfate standard solution, add water to make 40 mL, add 2 mL of hydrochloric acid solution, mix well, which is the reference solution. To the test solution and reference solution, add 5 mL of barium chloride solution respectively, dilute with water to 50 mL, shake thoroughly, and let stand for 10 min. Place on the same black background, observe axially, and compare the resulting turbidity.

A.7.4 Result Judgment

If the turbidity of the test solution is less than that of the reference solution, it is judged as compliant; if the turbidity of the test solution is greater than that of the reference solution, it is judged as non-compliant.

A.8 Determination of Chlorides (Calculated as Cl)

A.8.1 Reagents and Materials

- A.8.1.1 Sodium chloride standard stock solution: Accurately weigh 0.165 g of sodium chloride, add water to dissolve and dilute to volume in a 1000 mL volumetric flask, mix well, as stock solution. 1 mL of this solution is equivalent to 100 μg of Cl.
- A.8.1.2 Sodium chloride standard working solution: Precisely measure 10 mL of sodium chloride standard stock solution, place in a 100 mL volumetric flask, dilute to the mark with water, mix well. 1 mL of this solution is equivalent to 10 μg of Cl. This solution is prepared right before use.
- A.8.1.3 Silver nitrate solution: $c(\mathrm{AgNO_3}) = 0.1$ mol/L.
- A.8.1.4 Nitric acid solution: $10 + 90$.

A.8.2 Instruments and Equipment

- A.8.2.1 Analytical balance: readability of 0.01 g.
- A.8.2.2 Nessler colorimetric tube: 50 mL.

A.8.3 Analytical Procedure

Weigh 1 g of the sample and place it into a Nessler tube. Add water to dissolve and dilute to 25 mL. Then, add 10 mL of nitric acid solution, add more water to bring the total volume to approximately 40 mL, and mix well to obtain the test solution.

For sorbitol samples, take another Nessler tube, add 5 mL of the standard sodium chloride working solution, add water to dissolve and dilute to 25 mL, then add 10 mL of nitric acid

solution, add more water to bring the total volume to approximately 40 mL, and mix well to obtain the reference solution.

For sorbitol liquid samples, take another Nessler tube, add 1 mL of the standard sodium chloride working solution, add water to dissolve and dilute to 25 mL, then add 10 mL of nitric acid solution, add more water to bring the total volume to approximately 40 mL, and mix well to obtain the reference solution.

Add 1.0 mL of silver nitrate solution to both the test solution and the reference solution, dilute each with water to a final volume of 50 mL, and mix well. Allow them to stand in the dark for a specified time, then place them against a black background and observe the resulting turbidity along the vertical axis.

A.8.4 Interpretation of Results

If the turbidity of the test solution is less intense than that of the reference solution, the sample is considered to pass; if the turbidity of the test solution is more intense than that of the reference solution, the sample is considered to fail.

Appendix B

Conversion of Cuprous Oxide to Reducing Sugars (Expressed as Glucose) Using the Potassium Permanganate Method

See Table B.1 for the conversion of cuprous oxide to glucose using the potassium permanganate method.

Table B.1 Conversion of Cuprous Oxide to Glucose (Potassium Permanganate Method)

$c\left(\frac{1}{5}\mathrm{KMnO_4}\right) = 0.1000\ \mathrm{mol/L}$ Potassium Permanganate Standard Titration Solution /mL	Mass of (Cu_2O)/mg	Mass of glucose /mg	$c\left(\frac{1}{5}\mathrm{KMnO_4}\right) = 0.1000\ \mathrm{mol/L}$ Potassium Permanganate Standard Titration Solution /mL	Mass of (Cu_2O) /mg	Mass of glucose /mg	$c\left(\frac{1}{5}\mathrm{KMnO_4}\right) = 0.1000\ \mathrm{mol/L}$ Potassium Permanganate Standard Titration Solution /mL	Mass of (Cu_2O) /mg	Mass of glucose /mg
2.0	12.7	6.5	4.7	29.8	14.8	7.4	46.9	23.6
2.1	13.3	6.7	4.8	30.4	15.2	7.5	47.6	24.0
2.2	14.0	7.0	4.9	31.1	15.5	7.6	48.2	24.2
2.3	14.6	7.3	5.0	31.7	15.7	7.7	48.8	24.5

2.4	15.2	7.6	5.1	32.2	16.0	7.8	49.5	25.0
2.5	15.9	8.0	5.2	33.0	16.4	7.9	50.1	25.2
2.6	16.5	8.2	5.3	34.2	16.7	8.0	50.8	25.5
2.7	17.1	8.5	5.4	34.9	17.0	8.1	51.4	26.0
2.8	17.8	8.9	5.5	35.5	17.3	8.2	52.0	26.2
2.9	18.4	9.2	5.6	36.1	17.6	8.3	52.7	26.6
3.0	19.0	9.5	5.7	36.8	17.9	8.4	53.3	27.0
3.1	19.6	9.8	5.8	37.4	18.3	8.5	53.9	27.2
3.2	20.3	10.0	5.9	37.7	18.6	8.6	54.6	27.6
3.3	20.9	10.2	6.0	38.1	19.0	8.7	55.2	28.0
3.4	21.5	10.5	6.1	38.7	19.3	8.8	55.8	28.2
3.5	22.2	10.9	6.2	39.3	19.6	8.9	56.5	28.6
3.6	22.8	11.2	6.3	40.0	19.9	9.0	57.1	29.0
3.7	23.4	11.5	6.4	40.6	20.2	9.1	57.7	29.2
3.8	24.1	11.9	6.5	41.2	20.5	9.2	58.4	29.6
3.9	24.7	12.2	6.6	41.9	21.0	9.3	59.0	30.3
4.0	25.4	12.5	6.7	42.5	21.2	9.4	59.6	30.2
4.1	26.0	12.8	6.8	43.1	21.5	9.5	60.3	30.6
4.2	26.6	13.1	6.9	43.8	22.0	9.6	60.9	31.0
4.3	27.3	13.5	7.0	44.4	22.2	9.7	61.5	31.3
4.4	27.9	13.8	7.1	45.0	22.5	9.8	62.2	31.6
4.5	28.5	14.1	7.2	45.7	23.0	9.9	62.8	32.0
4.6	29.2	14.5	7.3	46.3	23.2	10.0	63.5	32.3
10.1	64.1	32.7	13.3	84.4	43.8	16.5	104.7	55.3
10.2	64.7	33.0	13.4	85.0	44.1	16.6	105.4	55.7
10.3	65.4	33.4	13.5	85.6	44.5	16.7	106.0	56.1

10.4	66.0	33.7	13.6	86.3	45.0	16.8	106.6	56.4
10.5	66.6	34.0	13.7	86.9	45.2	16.9	107.3	56.8
10.6	67.3	34.4	13.8	87.5	45.6	17.0	107.9	57.1
10.7	67.9	34.7	13.9	88.2	46.0	17.1	108.5	57.5
10.8	68.5	35.1	14.0	88.9	46.3	17.2	109.1	57.8
10.9	69.2	35.5	14.1	89.5	46.7	17.3	109.8	58.2
11.0	69.8	35.8	14.2	90.1	47.0	17.4	110.4	58.6
11.1	7O.4	36.1	14.3	9O.8	47.4	17.5	111.0	59.0
11.2	71.1	36.5	14.4	91.4	47.7	17.6	111.7	59.3
11.3	71.7	36.8	14.5	92.0	48.1	17.7	112.3	59.7
11.4	72.3	37.1	14.6	92.7	48.5	17.8	112.9	60.0
11.5	73.0	37.5	14.7	93.3	48.8	17.9	113.5	60.4
11.6	73.6	37.8	14.8	93.9	49.1	18.0	114.3	60.8
11.7	74.3	38.2	14.9	94.6	49.5	18.1	114.9	61.2
11.8	74.9	38.5	15.0	95.2	49.8	18.2	115.5	61.5
11.9	75.5	38.8	15.1	95.8	50.2	18.3	116.2	62.0
12.0	76.2	39.2	15.2	96.4	50.5	18.4	116.8	62.3
12.1	76.8	39.6	15.3	97.1	51.0	18.5	117.4	62.8
12.2	77.4	39.9	15.4	97.7	51.3	18.6	118.1	63.1
12.3	78.1	40.3	15.5	98.3	51.6	18.7	118.7	63.4
12.4	78.7	40.6	15.6	99.0	52.2	18.8	119.3	63.8
12.5	79.3	41.0	15.7	99.6	52.4	18.9	120.0	64.2
12.6	80.0	41.3	15.8	100.2	52.7	19.0	120.6	64.5
12.7	80.6	41.7	15.9	100.9	53.1	19.1	121.2	65.0
12.8	81.2	42.0	16.0	101.6	53.5	19.2	121.8	65.2
12.9	81.9	42.4	16.1	102.2	54.0	19.3	122.5	65.7

13.0	82.5	42.7	16.2	102.8	54.2	19.4	123.1	66.0
13.1	83.1	43.1	16.3	103.5	54.6	19.5	123.7	66.4
13.2	83.7	43.4	16.4	104.1	55.0	19.6	124.4	66.8
19.7	125.0	67.1	22.5	142.8	78.0	25.3	160.6	89.1
19.8	125.6	67.5	22.6	143.5	78.4	25.4	161.2	89.5
19.9	126.3	68.0	22.7	144.1	78.7	25.5	161.8	89.8
20.0	127.0	68.3	22.8	144.7	79.1	25.6	162.5	90.3
20.1	127.6	68.7	22.9	145.4	79.5	25.7	163.1	90.6
20.2	128.2	69.0	23.0	146.0	80.0	25.8	163.7	91.1
20.3	128.9	69.4	23.1	146.6	80.3	25.9	164.4	91.5
20.4	129.5	69.8	23.2	147.2	80.6	26.0	165.1	92.0
20.5	130.1	70.2	23.3	147.9	81.1	26.1	165.7	92.3
20.6	130.8	70.5	23.4	148.5	81.5	26.2	166.3	92.7
20.7	131.4	71.0	23.5	149.1	81.8	26.3	167.0	93.1
20.8	132.0	71.3	23.6	149.8	82.3	26.4	167.6	93.5
20.9	132.7	71.7	23.7	150.4	82.6	26.5	168.2	94.0
21.0	133.3	72.1	23.8	151.0	83.0	26.6	168.9	94.3
21.1	133.9	72.5	23.9	151.7	83.5	26.7	169.5	94.7
21.2	134.5	72.8	24.0	152.4	84.0	26.8	170.1	95.1
21.3	135.2	73.3	24.1	153.0	84.3	26.9	170.8	95.5
21.4	135.8	73.6	24.2	153.6	84.7	27.0	171.4	96.0
21.5	136.4	74.0	24.3	154.3	85.1	27.1	172.0	96.3
21.6	137.1	74.5	24.4	154.9	85.5	27.2	172.6	96.6
21.7	137.7	74.8	24.5	155.5	86.0	27.3	173.3	97.1
21.8	138.3	75.2	24.6	156.2	86.3	27.4	173.9	97.5
21.9	139.0	75.6	24.7	156.8	86.7	27.5	174.5	98.0

22.0	139.7	76.0	24.8	157.4	87.1	27.6	175.2	98.3
22.1	140.3	76.4	24.9	158.1	87.5	27.7	175.8	98.7
22.2	140.9	76.8	25.0	158.7	88.0	27.8	176.4	99.0
22.3	141.6	77.2	25.1	159.3	88.3	27.9	177.1	99.5
22.4	142.2	77.6	25.2	159.9	88.6	28.0	177.8	100.0

END UNOFFICIAL TRANSLATION

3. Amendment to GB 1886.217—2016 National Food Safety Standard — Food Additive: Brilliant Blue

Amendment item

Add the following “note” to Table 2 under “3.2 Physicochemical Indicators”

"Note: Commercial liquid Brilliant Blue products shall use Brilliant Blue complying with this standard as the raw material. Food ingredients complying with corresponding standards and/or food additives complying with national food safety standards—such as benzoic acid and its sodium salt, sorbic acid and its potassium salt, propylene glycol, glycerin, propylene glycol alginate, tweens, sorbitol, sorbitol solution, ascorbic acid (vitamin C), tert-butylhydroquinone (TBHQ), vitamin E, thickeners, and acidity regulators—may be added. The Brilliant Blue content and sensory requirements of commercial products shall comply with their label claims. The indicators for loss on drying, total chlorides, and total sulfates do not apply to commercial liquid products. Except for the aforementioned exempted indicators, all other indicators shall comply with the requirements of this standard."

BEGIN UNOFFICIAL TRANSLATION

GB 1886.217—2016 National Food Safety Standard — Food Additive: Brilliant Blue

Issued on: August 31, 2016

Implemented on: January 1, 2017

Issued by: National Health and Family Planning Commission of the People's Republic of China

Preface

This standard replaces GB 7655.1-2005, *Food Additive — Brilliant Blue*.

Compared with GB 7655.1-2005, the main changes in this standard are as follows:

- The standard title has been revised to *National Food Safety Standard — Food Additive: Brilliant Blue*.
- The chemical name has been added.
- The index name for appearance has been revised to sensory requirements, and the index requirements have been modified.
- The indexes for loss on drying, total chlorides (calculated as NaCl), and total sulfates (calculated as Na_2SO_4) have been combined.
- The index name for heavy metals (calculated as Pb) has been changed to lead, and the test method has been modified.
- The test method for arsenic has been modified.
- The test method for the dissolution test has been modified.

1. Scope

This standard applies to the food additive Brilliant Blue, prepared through condensation and oxidation using *o*-chlorobenzaldehyde/benzaldehyde-*o*-sulfonic acid and *N*-ethyl-*N*-(3-sulfobenzyl)-aniline as raw materials.

2. Chemical Name, Molecular Formula, Structural Formula, and Relative Molecular Mass

2.1 Chemical Name

Disodium salt of 3 − [*N*-ethyl-*N* − [4 − [[4 − [*N*-ethyl-*N*-(3-sulfobenzyl)-aminophenyl](2-sulfophenyl)methylene]-2,5-cyclohexadien-1-ylidene]aminomethyl]benzenesulfonate

2.2 Molecular Formula

$$C_{37}H_{34}N_2Na_2O_9S_3$$

2.3 Structural Formula

(Refer to the chemical structure diagram in the official text)

2.4 Relative Molecular Mass

792.85 (based on the 2013 international relative atomic masses)

3. Technical Requirements

3.1 Sensory Requirements

Sensory requirements shall comply with the specifications in Table 1.

Table 1 — Sensory Requirements

Item	Requirement	Test Method
Color	Reddish-purple to bluish-purple	Take an appropriate amount of the sample and place it in a clean, dry white porcelain dish. Observe its color and state under natural light.
State	Powder or granules	

3.2 Physicochemical Indicators

Physicochemical indicators shall comply with the specifications in Table 2.

Table 2 — Physicochemical Indicators

Item	Indicator	Test Method
Brilliant Blue content, $w/\%$	≥ 85.0	Appendix A, A.4
Loss on drying, total chlorides (calculated as NaCl), and total sulfates (calculated as Na_2SO_4), $w/\%$	≤ 14.0	Appendix A, A.5
Water-insoluble matter, $w/\%$	≤ 0.20	Appendix A, A.6
Subsidiary dyes, $w/\%$	≤ 6.0	Appendix A, A.7
Arsenic (As), mg/kg	≤ 1.0	GB 5009.11 or GB 5009.76
Lead (Pb), mg/kg	≤ 10.0	GB 5009.12 or GB 5009.75
Manganese[a] (Mn), mg/kg	≤ 50.0	GB/T 5009.90
Chromium[b] (Cr), mg/kg	≤ 50.0	GB 5009.123

- Note:
- [a]: Process control item for the manganese method.
- [b]: Process control item for the chromium method.

Appendix A: Test Methods

A.1 Safety Precautions

Some reagents used in the test methods within this standard are toxic or corrosive. Appropriate safety and protective measures shall be taken during operation.

A.2 General Provisions

Unless otherwise specified, reagents and water used in this standard refer to analytical purity reagents and grade-three water specified in GB/T 6682. Standard solutions, standard solutions for impurity determination, preparations, and products used in the tests shall be prepared according to GB/T 601, GB/T 602, and GB/T 603, unless otherwise specified. Aqueous solutions are implied when no solvent is specified.

A.3 Identification Tests

A.3.1 Reagents and Materials

- Ammonium acetate solution: 1.5 g/L.

A.3.2 Instruments and Equipment

- A.3.2.1 Spectrophotometer.
- A.3.2.2 Absorption cell: 10 mm.

A.3.3 Identification Methods

- **A.3.3.1 Dissolution Test:** Weigh about 0.1 g of the sample (accurate to 0.01 g), dissolve in 100 mL of water, yielding a clear blue solution.
- **A.3.3.2 Absorbance Test:** Weigh about 0.1 g of the sample (accurate to 0.01 g), dissolve in 100 mL of ammonium acetate solution, take 1 mL of this solution, add ammonium acetate solution to make 200 mL. The maximum absorption wavelength of this solution is 628 nm ~ 632 nm.
    - *Note:* The measured absorbance value should be between 0.3 and 0.7; otherwise, adjust the sample concentration.

A.4 Determination of Brilliant Blue Content

A.4.1 Titanium Trichloride Titration Method (Arbitration Method)

- **A.4.1.1 Summary of Method:** In an acidic medium, Brilliant Blue is reduced and decomposed by titanium trichloride. Its content is calculated based on the consumption of standard titanium trichloride titration solution.

- **A.4.1.2 Reagents and Materials:**
  - A.4.1.2.1 Sodium hydrogen tartrate.
  - A.4.1.2.2 Standard titanium trichloride titration solution: $c(\mathrm{TiCl_3}) = 0.1$ mol/L (prepare freshly before use, preparation method given in Appendix B).
  - A.4.1.2.3 Carbon dioxide: content $\geq 99\%$.
- **A.4.1.3 Instruments and Equipment:** The apparatus diagram for the titanium trichloride titration method is shown in Figure A.1.

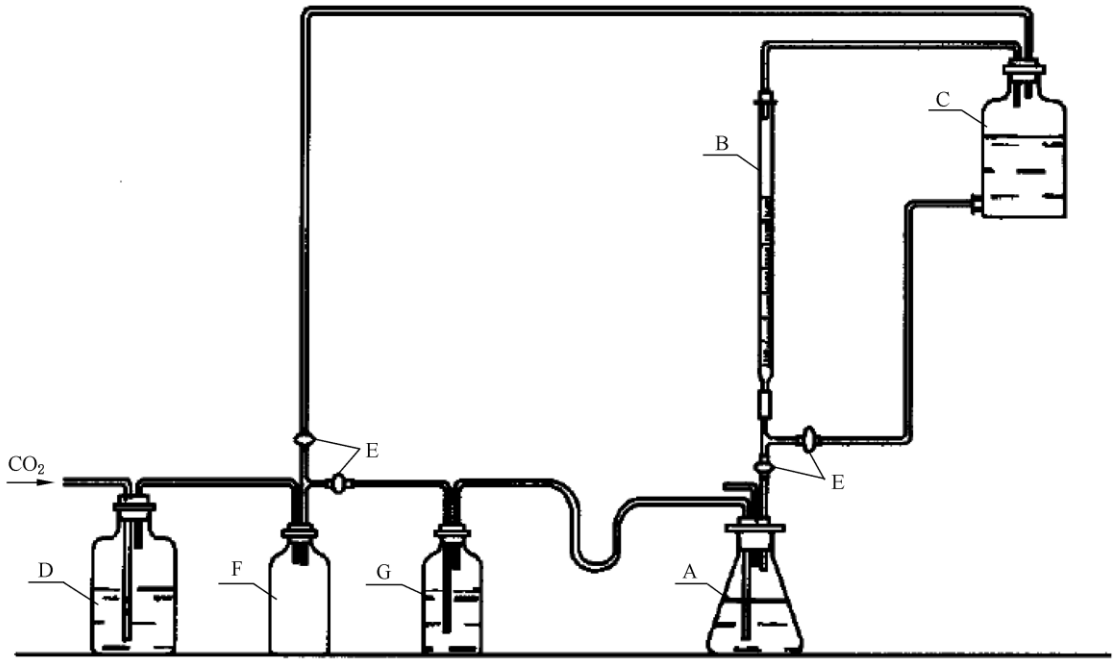

Descriptions of Figure A.1:

A - Conical flask (500 mL);

B - Brown burette (50 mL);

C - Lower-outlet glass bottle wrapped with black paper (2000 mL);

D - Container filled with equal parts mixture of ammonium carbonate and ferrous sulfate (5000 mL);

E - Stopcock;

F - Empty bottle;

G - Gas washing bottle filled with water).

- **A.4.1.4 Procedure:**

Weigh about 1 g of sample (accurate to 0.0001 g), place in a 500 mL conical flask, dissolve in 50 mL of freshly boiled water cooled to room temperature, add 15 g of sodium hydrogen tartrate and 150 mL of freshly boiled water. After shaking to dissolve, set up the apparatus as shown in Figure A.1. While passing carbon dioxide below the liquid surface, heat to boiling, and titrate with standard titanium trichloride titration solution until the inherent color of the sample solution disappears as the endpoint.

- **A.4.1.5 Calculation:** The mass fraction of Brilliant Blue, w_1, is calculated according to Equation (A.1):

$$w_1 = \frac{V \times c \times M}{m \times 1000 \times 2} \times 100\%$$

Where:

V — Volume of standard titanium trichloride titration solution consumed by the sample, in milliliters (mL);

c — Concentration of the standard titanium trichloride titration solution, in moles per liter (mol/L);

M — Molar mass of Brilliant Blue, in grams per mole ($M(C_{37}H_{34}N_2Na_2O_9S_3) = 792.85$ g/mol);

m — Mass of the sample, in grams (g);

1000 — Volume conversion factor;

2 — Molar conversion factor.

Test results are based on the arithmetic means of parallel determinations (rounded to 1 decimal place). The absolute difference between two independent determinations obtained under repeatability conditions shall not exceed 1.0% of the arithmetic mean.

A.4.2 Spectrophotometric Colorimetry

- **A.4.2.1 Summary of Method:** Dissolve the sample and a Brilliant Blue reference standard of known content in water separately, measure their respective absorbances at the maximum wavelength, and then calculate their content.
- **A.4.2.2 Reagents and Materials:**
  - A.4.2.2.1 Ammonium acetate solution: 1.5 g/L.
  - A.4.2.2.2 Brilliant Blue reference standard: content ≥ 85.0% (determined according to A.4.1).
- **A.4.2.3 Instruments and Equipment:**
  - A.4.2.3.1 Spectrophotometer.
  - A.4.2.3.2 Absorption cell: 10 mm.

- **A.4.2.4 Preparation of Brilliant Blue Reference Standard Solution:** Weigh about 0.25 g of Brilliant Blue reference standard (accurate to 0.0001 g), dissolve in an appropriate amount of water, transfer into a 1000 mL volumetric flask, dilute to the mark with water, and shake well. Accurately pipette 5 mL into a 500 mL volumetric flask, add ammonium acetate solution to dilute to the mark, shake well, and set aside (the absorbance value at the maximum absorption wavelength should be between 0.3 and 0.7).
- **A.4.2.5 Preparation of Brilliant Blue Sample Solution:** Weighing and operational methods are the same as the preparation of the Brilliant Blue reference standard solution.
- **A.4.2.6 Procedure:** Place the Brilliant Blue reference standard solution and the Brilliant Blue sample solution into 10 mm absorption cells respectively. Measure their respective absorbances using a spectrophotometer at the maximum absorption wavelength, using ammonium acetate solution as the reference blank.
- **A.4.2.7 Calculation:** The mass fraction of Brilliant Blue is calculated according to Equation (A.2):

$$w_1 = \frac{A_1 \times m_0}{A_0 \times m_1} \times w_0 \times 100\%$$

Where:

  - A_1 — Absorbance of the sample solution;
  - m_0 — Mass of the Brilliant Blue reference standard, in grams (g);
  - A_0 — Absorbance of the Brilliant Blue reference standard solution;
  - m_1 — Mass of the sample, in grams (g);
  - w_0 — Mass fraction of the Brilliant Blue reference standard (determined according to A.4.1), %.

Test results are based on the arithmetic means of parallel determinations (rounded to 1 decimal place). The absolute difference between two independent determinations obtained under repeatability conditions shall not exceed 1.0% of the arithmetic mean.

A.5 Determination of Loss on Drying, Total Chlorides (as NaCl), and Total Sulfates (as Na_2SO_4)

A.5.1 Determination of Loss in Drying

- **A.5.1.1 Summary of Method:** Place the sample in a weighing bottle, dry in an electric constant-temperature drying oven to constant mass and then weigh the dried substance.
- **A.5.1.2 Instruments and Equipment:** Constant-temperature drying oven.
- **A.5.1.3 Procedure:** Weigh about 2 g of sample (accurate to 0.0001 g), place in a $(30 \sim 40)$ mm weighing bottle that has been previously dried to constant mass at $135°C \pm 2°C$, and dry to constant mass in a constant-temperature drying oven at $135°C \pm 2°C$.
- **A.5.1.4 Calculation:** The mass fraction of loss on drying, w_2, is calculated according to Equation (A.3):

$$w_2 = \frac{m_2 - m_3}{m_4} \times 100\%$$

Where:

- m_2 — Mass of the sample and weighing bottle before drying, in grams (g);
- m_3 — Mass of the sample and weighing bottle after drying to constant mass, in grams (g);
- m_4 — Mass of the sample, in grams (g).

Test results are based on the arithmetic means of parallel determinations (rounded to 1 decimal place). The absolute difference between two independent determinations obtained under repeatability conditions shall not exceed 0.2% of the arithmetic mean.

A.5.2 Determination of Chlorides (as NaCl)

- **A.5.2.1 Summary of Method:** Add a known amount of silver nitrate solution in an acidic medium to precipitate chloride ions as silver chloride. Then, add ferric ammonium sulfate solution as an indicator, and titrate excess silver nitrate with standard ammonium thiocyanate titration solution.
- **A.5.2.2 Reagents and Materials:**
  - A.5.2.2.1 Nitrobenzene.
  - A.5.2.2.2 Nitric acid solution: $1 + 1$.
  - A.5.2.2.3 Silver nitrate solution: $c(\mathrm{AgNO_3}) = 0.1$ mol/L.
  - A.5.2.2.4 Ferric ammonium sulfate solution: Weigh 14 g of ferric ammonium sulfate, dissolve in 100 mL of water, filter, add 10 mL of nitric acid, and store in a brown bottle.
  - A.5.2.2.5 Standard ammonium thiocyanate titration solution: $c(\mathrm{NH_4SCN}) = 0.1$ mol/L.
  - A.5.2.2.6 Activated carbon: 767 needle type.
- **A.5.2.3 Preparation of Sample Solution:** Weigh about 2 g of sample (accurate to 0.0001 g), dissolve in 150 mL of water, add about 15 g of activated carbon, gently boil for 2 min ~ 3 min, cool to room temperature, add 1 mL of nitric acid solution, shake continuously, and let stand for 30 min (shaking occasionally during this period). Filter through dry filter paper. If the filtrate is colored, add another 5 g of activated carbon, let stand for 60 min (shaking occasionally), and filter again through dry filter paper (if still colored, replace the activated carbon and repeat the operation until the filtrate is colorless). Wash the activated carbon 3 times with 10 mL of water each time, combine the filtrates into a 200 mL volumetric flask, add water to the mark, and shake well. This is used for the determination of chloride and sulfate contents.
- **A.5.2.4 Procedure:** Pipette 50 mL of the sample solution into a 500 mL conical flask, add 2 mL of nitric acid solution, 10 mL of silver nitrate solution (add slightly more if chloride content is high), and 5 mL of nitrobenzene. Shake vigorously until the silver chloride coagulates. Add 1 mL of ferric ammonium sulfate test solution, titrate the excess silver nitrate with standard ammonium thiocyanate titration solution to the endpoint and maintain for 1 min. Perform a blank test simultaneously using the same method.

- **A.5.2.5 Calculation:** The mass fraction of chlorides (as NaCl) is calculated according to Equation (A.4):

$$w_3 = \frac{(V_1 - V_0) \times c_1 \times M_1}{m_5 \times 1000 \times \frac{50}{200}} \times 100\%$$

Where:

- V_1 — Volume of standard ammonium thiocyanate titration solution consumed for titrating the blank solution, in milliliters (mL);
- V_0 — Volume of standard ammonium thiocyanate titration solution consumed for titrating the sample, in milliliters (mL);
- c_1 — Concentration of the standard ammonium thiocyanate titration solution, in moles per liter (mol/L);
- M_1 — Molar mass of sodium chloride, in grams per mole ($M(\mathrm{NaCl}) = 58.44$ g/mol, noted as 58.4 in text);
- m_5 — Mass of the sample, in grams (g);
- 1000 — Volume conversion factor;
- 50 — Volume of the sample solution pipetted, in milliliters (mL);
- 200 — Total volume of the prepared sample solution, in milliliters (mL).

Test results are based on the arithmetic means of parallel determinations (rounded to 1 decimal place). The absolute difference between two independent determinations obtained under repeatability conditions shall not exceed 0.3% of the arithmetic mean.

A.5.3 Determination of Sulfates (as Na_2SO_4)

- **A.5.3.1 Summary of Method:** Add standard barium chloride titration solution dropwise to the sample to precipitate sulfate ions in the form of barium sulfate, using sodium rhodizonate indicator solution as an external indicator to determine the titration endpoint.
- **A.5.3.2 Reagents and Materials:**
  - A.5.3.2.1 Sodium hydroxide solution: 0.2 g/L.
  - A.5.3.2.2 Hydrochloric acid solution: $1 + 1999$.
  - A.5.3.2.3 Standard barium chloride titration solution: $c\left(\frac{1}{2}\mathrm{BaCl_2}\right) = 0.1$ mol/L (preparation method in Appendix C).
  - A.5.3.2.4 Phenolphthalein indicator solution: 10 g/L.
  - A.5.3.2.5 Sodium rhodizonate indicator solution: Weigh 0.1 g of sodium rhodizonate, dissolve in 10 mL of water (prepare freshly before use).
- **A.5.3.3 Procedure:** Pipette 25 mL of the sample solution (A.5.2.3) into a 250 mL conical flask, add 1 drop of phenolphthalein indicator solution, add sodium hydroxide solution dropwise until pink, then add hydrochloric acid solution dropwise until the pink color disappears, shake well. Dissolve and titrate with standard barium chloride titration solution under continuous shaking, using sodium rhodizonate indicator solution as an external indicator. The endpoint is reached when the intersection of the reaction liquid

and the indicator on the filter paper shows a rose-red spot that remains unchanged for 2 min. Perform a blank test simultaneously using the same method.

- **A.5.3.4 Calculation:** The mass fraction of sulfates (as Na_2SO_4) is calculated according to Equation (A.5):

$$w_4 = \frac{(V_3 - V_2) \times c_2 \times M_2}{m_6 \times 1000 \times 2 \times \frac{25}{200}} \times 100\%$$

Where:

- V_3 — Volume of standard barium chloride titration solution consumed by the test solution, in milliliters (mL);
- V_2 — Volume of standard barium chloride titration solution consumed by the blank solution, in milliliters (mL);
- c_2 — Concentration of the standard barium chloride titration solution, in moles per liter (mol/L);
- M_2 — Molar mass of sodium sulfate, in grams per mole ($M(Na_2SO_4) = 142$ g/mol);
- m_6 — Mass of the sample, in grams (g);
- 1000 — Conversion factor;
- 2 — Molar conversion factor;
- 25 — Volume of sample solution pipetted, in milliliters (mL);
- 200 — Total volume of the prepared sample solution, in milliliters (mL).

Test results are based on the arithmetic means of parallel determinations (rounded to 1 decimal place). The absolute difference between two independent determinations obtained under repeatability conditions shall not exceed 0.2% of the arithmetic mean.

A.5.4 Calculation of Total Loss on Drying, Chlorides (as NaCl), and Sulfates (as Na_2SO_4)

The total mass fraction w_5 of loss on drying, chlorides (as NaCl), and sulfates (as Na_2SO_4) is calculated according to Equation (A.6):

$$w_5 = w_2 + w_3 + w_4$$

Where:

- w_2 — Mass fraction of loss on drying, %;
- w_3 — Mass fraction of chlorides (as NaCl), %;
- w_4 — Mass fraction of sulfates (as Na_2SO_4), %.

The calculation result is retained to 1 decimal place.

A.6 Determination of Water-Insoluble Matter

A.6.1 Summary of Method

After dissolving and filtering the sample, the insoluble matter is dried in a constant-temperature drying oven to constant mass and then weighed.

A.6.2 Instruments and Equipment

- A.6.2.1 Glass-sintered crucible (G): Pore size 5 μm ~ 15 μm.
- A.6.2.2 Constant-temperature drying oven.

A.6.3 Procedure

Weigh about 3 g of sample (accurate to 0.001 g), place in a 500 mL beaker, add 250 mL of water at 50°C ~ 60°C to dissolve it. Filter through a glass-sintered crucible (G) that has been previously dried to constant mass at 135°C ± 2°C, wash thoroughly with hot water until the filtrate is colorless, and dry to constant mass in a constant-temperature drying oven at 135°C ± 2°C.

A.6.4 Calculation

The mass fraction of water-insoluble matter, w_6, is calculated according to Equation (A.7):

$$w_6 = \frac{m_7 - m_8}{m_9} \times 100\%$$

Where:

- m_7 — Mass of the water-insoluble matter and glass-sintered crucible after drying, in grams (g);
- m_8 — Mass of the glass-sintered crucible, in grams (g);
- m_9 — Mass of the sample, in grams (g).

Test results are based on the arithmetic mean of parallel determinations (rounded to 2 decimal places). The absolute difference between two independent determinations obtained under repeatability conditions shall not exceed 0.2% of the arithmetic mean.

A.7 Determination of Subsidiary Dyes

A.7.1 Summary of Method

Separate various components using paper chromatography, elute them, and then quantify them spectrophotometrically.

A.7.2 Reagents and Materials

- A.7.2.1 Anhydrous ethanol.
- A.7.2.2 n-Butanol.
- A.7.2.3 Acetone solution: 1 + 1.
- A.7.2.4 Ammonia solution: 4 + 96.

- A.7.2.5 Sodium bicarbonate solution: 4 g/L.

A.7.3 Instruments and Equipment

- A.7.3.1 Spectrophotometer.
- A.7.3.2 Chromatographic filter paper: No. 1 medium speed, 150 mm × 250 mm.
- A.7.3.3 Chromatographic tank: Φ240 mm × 300 mm.
- A.7.3.4 Micro-injector: 100 μL.
- A.7.3.5 Nessler colorimetric tube: 50 mL with glass ground stopper.
- A.7.3.6 Glass-sintered funnel (G): Pore size 15 μm ~ 40 μm.
- A.7.3.7 50 mm absorption cell.
- A.7.3.8 10 mm absorption cell.

A.7.4 Procedure

- **A.7.4.1 Paper Chromatography Conditions:**
  - A.7.4.1.1 Developing solvent: n-butanol + anhydrous ethanol + ammonia solution = 6 + 2 + 3.
  - A.7.4.1.2 Temperature: 20°C ~ 25°C.
- **A.7.4.2 Preparation of Sample Solution:** Weigh about 1 g of sample (accurate to 0.001 g), place in a beaker, add an appropriate amount of water to dissolve, transfer into a 100 mL volumetric flask, dilute to the mark, and shake well for later use. The concentration of this sample solution is 1%.
- **A.7.4.3 Preparation of Sample Eluate:** Use a micro-injector to take 100 μL of the sample solution, uniformly spot it in a straight line on a baseline 25 mm away from the bottom edge of the filter paper, making its width on the filter paper no more than 5 mm and length 130 mm, and dry with a hair dryer. Place the filter paper into a chromatographic tank containing pre-prepared developing solvent, with the bottom edge of the filter paper immersed 10 mm below the surface of the developing solvent. Wait until the solvent front rises to 150 mm or until the separation of subsidiary dyes is satisfactory. Remove the chromatographic filter paper and dry it with cold air. Develop a blank filter paper under the same conditions; this blank filter paper should be cut from an adjacent section of the same sheet of filter paper used in the above steps.
- *(Schematic diagram of paper chromatography for subsidiary dyes shown in Figure A.2. displaying baseline, main dye, subsidiary dyes (1) through (5), and dimensional layout).*

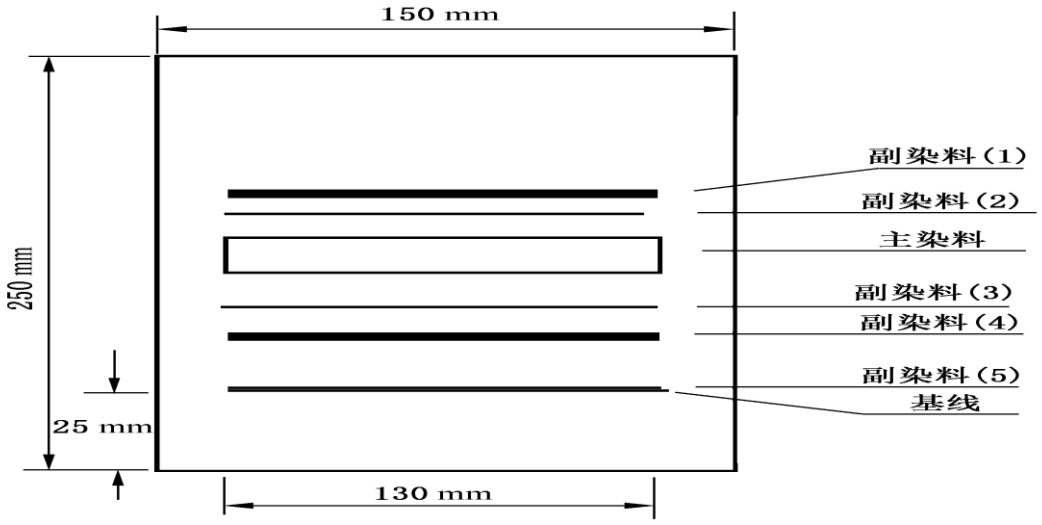

Cut out each subsidiary dye band obtained after development and the corresponding parts of the blank filter paper of the same size, cut them into fine strips of about 5 mm × 15 mm, and place them into respective 50 mL Nessler colorimetric tubes. Accurately add 5 mL of acetone solution, shake for 3 min ~ 5 min, then accurately add 20 mL of sodium bicarbonate solution, shake thoroughly, and naturally filter through glass-sintered funnels (G). The filtrate should be clear and free of suspended matter. Respective eluates for each subsidiary dye and the blank are thus obtained. Measure the absorbance of each subsidiary dye eluate on a spectrophotometer at its respective maximum absorption wavelength using a 50 mm absorption cell. When measuring absorbance on the spectrophotometer, use a mixture of 5 mL acetone solution and 20 mL sodium bicarbonate solution as the reference blank.

- **A.7.4.4 Preparation of Standard Solution:** Pipette 2 mL of the 1% sample solution into a 100 mL volumetric flask, dilute to the mark, and shake well. This solution serves as the standard solution.
- **A.7.4.5 Preparation of Standard Eluate:** Use a micro-injector to take 100 μL of the standard solution, uniformly spot it on a baseline 25 mm away from the bottom edge of the filter paper, and dry with a hair dryer. Place the filter paper into a chromatographic tank containing pre-prepared developing solvent. When the solvent front rises 40 mm, take it out, dry with cold air, cut off all developed dye portions, and operate according to the method in A.7.4.3 to obtain the standard eluate. Measure the absorbance at the maximum absorption wavelength using a 10 mm absorption cell. Concurrently develop a blank filter paper under the same conditions, follow the same procedure, and measure the absorbance of the blank eluate.
- **A.7.4.6 Calculation:** The mass fraction of subsidiary dyes, w_7, is calculated according to Equation (A.8):

$$w_7 = \frac{\sum(A-b)}{(A_s-b_s)\times 5}\times\frac{100}{2}\times w_1\times 100\%$$

Where:

- A — Absorbance of each subsidiary dye eluate measured with a 50 mm optical path length;
- b — Absorbance of the blank eluate corresponding to each subsidiary dye measured with a 50 mm optical path length;
- A_s — Absorbance of the standard eluate measured with a 10 mm optical path length;
- b_s — Absorbance of the standard blank eluate measured with a 10 mm optical path length;
- 5 — Multiple scaling factor for optical path length conversion to 10 mm;
- 100 — Multiple scaling factor for converting standard eluate back to 1% sample solution;
- w_1 — Mass fraction of Brilliant Blue in the sample (determined in A.4), %.

Test results are based on the arithmetic means of parallel determinations (rounded to 1 decimal place). The absolute difference between two independent determinations obtained under repeatability conditions shall not exceed 0.2% of the arithmetic mean.

Appendix B: Preparation Method of Standard Titanium Trichloride Titration Solution

B.1 Reagents and Materials

- B.1.1 Hydrochloric acid.
- B.1.2 Ammonium iron (II) sulfate.
- B.1.3 Ammonium thiocyanate solution: 200 g/L.
- B.1.4 Sulfuric acid solution: $1 + 1$.
- B.1.5 Iron (III) chloride solution.
- B.1.6 Potassium dichromate standard titration solution: $c\left(\frac{1}{6}\mathrm{K_2Cr_2O_7}\right) = 0.1$ mol/L.

B.2 Instruments and Equipment

The titration apparatus setup is shown in Figure A.1.

B.3 Preparation of Standard Titanium Trichloride Titration Solution

B.3.1 Preparation

Take 100 mL of iron (III) chloride solution and 75 mL of hydrochloric acid, place in a 1000 mL brown volumetric flask, dilute to the mark with water freshly boiled and cooled to room temperature, shake well, immediately pour into a light-protected lower-outlet bottle, and store under carbon dioxide gas protection.

B.3.2 Standardization

Weigh about 3 g (accurate to 0.0001 g) of ammonium iron (II) sulfate, place in a 500 mL conical flask, add 50 mL of freshly boiled and cooled water under a carbon dioxide gas stream

protection to dissolve it. Then add 25 mL of sulfuric acid solution, continue passing a carbon dioxide gas stream below the liquid surface for protection, quickly and accurately add 35 mL of potassium dichromate standard titration solution, and then titrate with the titanium trichloride standard solution being standardized until close to the calculated endpoint. Immediately add 25 mL of ammonium thiocyanate solution and continue titrating with the titanium trichloride standard solution until the color changes from red to green, which is the endpoint. The entire titration process should be operated under carbon dioxide gas protection, and a blank test must be performed concurrently.

B.3.3 Calculation

The concentration of the standard titanium trichloride solution, $c(\mathrm{TiCl_3})$, in moles per liter (mol/L), is calculated according to Equation (B.1):

$$c(\mathrm{TiCl_3}) = \frac{V \times c}{V_1 - V_2}$$

Where:

- V — Volume of the potassium dichromate standard titration solution, in milliliters (mL);
- c — Concentration of the potassium dichromate standard titration solution, in moles per liter (mol/L);
- V_1 — Volume of the standard titanium trichloride titration solution consumed to titrate the solution oxidized by potassium dichromate standard titration solution to titanium (IV), in milliliters (mL);
- V_2 — Volume of the standard titanium trichloride titration solution consumed in the blank titration, in milliliters (mL).

The calculation result is expressed to 4 decimal places. The above standardization must be performed immediately when analyzing samples.

Appendix C: Preparation Method of Standard Barium Chloride Solution

C.1 Reagents and Materials

- C.1.1 Barium chloride.
- C.1.2 Ammonia water.
- C.1.3 Standard sulfuric acid titration solution: $c\left(\frac{1}{2}\mathrm{H_2SO_4}\right) = 0.1$ mol/L.
- C.1.4 Sodium rhodizonate indicator solution: Weigh 0.1 g of sodium rhodizonate, dissolve in 10 mL of water, prepare freshly before use.
- C.1.5 Broad-range pH test paper.

C.2 Preparation

Weigh 12.25 g of barium chloride, dissolve in 500 mL of water, transfer into a 1000 mL volumetric flask, dilute to the mark, and shake well.

C.3 Standardization Method

Pipette 20 mL of standard sulfuric acid titration solution, place in a 250 mL conical flask, add 50 mL of water, and neutralize with ammonia water until broad-range pH test paper indicates 8. Then titrate with the standard barium chloride titration solution, using sodium rhodizonate indicator solution as an external indicator. The endpoint is reached when the intersection of the reaction liquid and the indicator on the filter paper displays a rose-red spot and remains unchanged for 2 min.

C.4 Calculation

The concentration of the standard barium chloride titration solution, $c\left(\frac{1}{2}\mathrm{BaCl_2}\right)$, in moles per liter (mol/L), is calculated according to Equation (C.1):

$$c\left(\frac{1}{2}\mathrm{BaCl_2}\right) = \frac{V \times c}{V_1}$$

Where:

- V — Volume of the standard sulfuric acid titration solution, in milliliters (mL);
- c — Concentration of the standard sulfuric acid titration solution, in moles per liter (mol/L);
- V_1 — Volume of the standard barium chloride titration solution consumed, in milliliters (mL).

The calculation result is expressed to 4 decimal places.

END UNOFFICIAL TRANSLATION

4. Amendment to GB 1886.220—2016 National Food Safety Standard - Food Additive: Ponceau 4R"

Amendment item

Add the following “note” to Table 2 under “3.2 Physicochemical Indicators”

"Note: Commercialized liquid Ponceau 4R products shall use Ponceau 4R complying with this standard as the raw material, and may add food raw materials complying with corresponding standards and/or food additives complying with national food safety standards, such as benzoic acid and its sodium salts, sorbic acid and its potassium salts, propylene glycol, glycerin, propylene glycol alginate, tweens, sorbitol, sorbitol liquid, ascorbic acid (vitamin C), tertiary butylhydroquinone (TBHQ), vitamin E, as well as thickeners and acidity regulators. The Ponceau 4R content and sensory requirements of commercialized products shall comply with claims; the total indicators for loss on drying, chlorides, and sulfates are not applicable to

commercialized liquid products. Except for the aforementioned inapplicable indicators, all other indicators shall comply with the provisions of this standard."

BEGIN UNOFFICIAL TRANSLATION

GB 1886.220-2016 National Food Safety Standard — Food Additive Ponceau 4R

Published on: August 31, 2016

Implemented on: January 1, 2017

Published by: National Health and Family Planning Commission of the People's Republic of China

Preface

This standard replaces GB 4480.1-2001 "Food Additive Ponceau 4R". Compared with GB 4480.1-2001, the main changes in this standard are as follows:

- The standard name was changed to "National Food Safety Standard - Food Additive Ponceau 4R".
- Modified the scope.
- Added the chemical name.
- The indicator name for appearance was changed to sensory requirements.
- The indicators for loss on drying, total chlorides (calculated as NaCl), and total sulfates (calculated as Na_2SO_4) were combined.
- Added indicator requirements and test methods for the sum of unreacted intermediates and un-sulfonated aromatic primary amines (calculated as aniline).
- The indicator name for heavy metals (calculated as Pb) was changed to lead, and the test method was modified.
- Modified the test method for arsenic.
- Modified the identification method.

1 Scope

This standard applies to the food additive Ponceau 4R, which is prepared by diazotization of sodium 1-naphthylamine-4-sulfonate as raw material and subsequent coupling with dipotassium 2-naphthol-6,8-disulfonate.

2 Chemical Name, Molecular Formula, Structural Formula, and Relative Molecular Mass

- **2.1 Chemical Name:** Trisodium 1-(4'-sulfo-1'-naphthylazo)-2-naphthol-6,8-disulfonate
- **2.2 Molecular Formula:** $C_{20}H_{11}N_2Na_3O_{10}S_3 \cdot 1.5H_2O$

- **2.3 Structural Formula:**

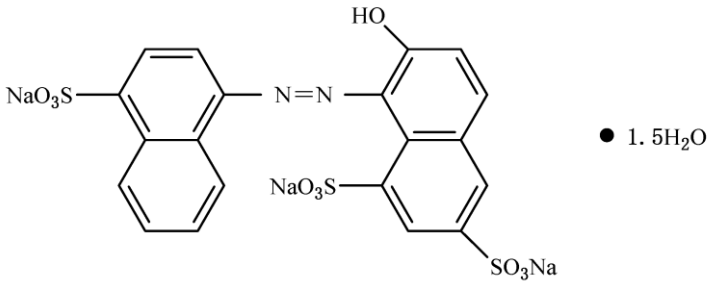

- **2.4 Relative Molecular Mass:** 631.51 (based on the 2013 international relative atomic masses)

3 Technical Requirements

3.1 Sensory Requirements

Sensory requirements shall comply with the specifications in Table 1.

Table 1 — Sensory Requirements

Item	Requirement	Test Method
Color	Red to deep red	Place an appropriate amount of sample in a clean, dry white porcelain dish, and observe its color and state under natural light.
State	Powder or granules	

3.2 Physicochemical Indicators

Physicochemical indicators shall comply with the specifications in Table 2.

Table 2 — Physicochemical Indicators

Item	Indicator	Test Method
Ponceau 4R content, $w/\% \geq$	85.0	Appendix A, A.4
Loss on drying, total chlorides (calculated as NaCl), and total sulfates (calculated as Na_2SO_4), $w/\% \leq$	18.0	Appendix A, A.5
Water-insoluble matter, $w/\% \leq$	0.20	Appendix A, A.6

Item	Indicator	Test Method
Subsidiary dyes, $w/\% \leq$	3.0	Appendix A, A.7
Sum of unreacted intermediates, $w/\% \leq$	0.5	Appendix A, A.8
Un-sulfonated aromatic primary amines (calculated as aniline), $w/\% \leq$	0.01	Appendix A, A.9
Arsenic (As) / (mg/kg) ≤	1.0	GB 5009.11 or GB 5009.76
Lead (Pb) / (mg/kg) ≤	10.0	GB 5009.12 or GB 5009.75

Appendix A: Test Methods

A.1 Safety Precautions

Some reagents used in the test methods of this standard are toxic or corrosive. Appropriate safety and protective measures shall be taken during operation.

A.2 General Provisions

Unless otherwise specified, the reagents and water used in this standard refer to analytical reagent grade and Grade 3 water specified in GB/T 6682. Standard titration solutions, standard solutions for impurity determination, preparations, and products used in the tests shall be prepared according to GB/T 601, GB/T 602, and GB/T 603, unless otherwise specified. Solutions used in tests without specifying the solvent refer to aqueous solutions.

A.3 Identification Test

A.3.1 Reagents and Materials

- Ammonium acetate solution: 1.5 g/L.

A.3.2 Instruments and Equipment

- A.3.2.1 Spectrophotometer.
- A.3.2.2 Cuvette: 10 mm.

A.3.3 Identification Method

A.3.3.1 Dissolution Test

Weigh about 0.1 g of sample (accurate to 0.01 g), dissolve in 100 mL of water to form a clear red solution.

A.3.3.2 Absorbance Test

Weigh about 0.1 g of sample (accurate to 0.01 g), dissolve in 100 mL of ammonium acetate solution. Take 1 mL of this solution, add ammonium acetate solution to make 100 mL. The maximum absorption wavelength of this solution is between 505 nm and 510 nm. Note: The measured absorbance value should be between 0.3 and 0.7; otherwise, adjust the sample concentration.

A.4 Determination of Ponceau 4R Content

A.4.1 Titanium Trichloride Titration Method (Arbitration Method)

A.4.1.1 Summary of Method

In an alkaline medium, the azo group in the structure of Ponceau 4R is reduced and decomposed by titanium trichloride. The content is calculated based on the consumption of the titanium trichloride standard titration solution.

A.4.1.2 Reagents and Materials

- A.4.1.2.1 Trisodium citrate.
- A.4.1.2.2 Titanium trichloride standard titration solution: $c(TiCl_3) = 0.1$ mol/L (prepared just before use; preparation method described in Appendix B).
- A.4.1.2.3 Carbon dioxide: Purity $\geq 99\%$.

A.4.1.3 Instruments and Equipment

The apparatus diagram for the titanium trichloride titration method is shown in Figure A.1.

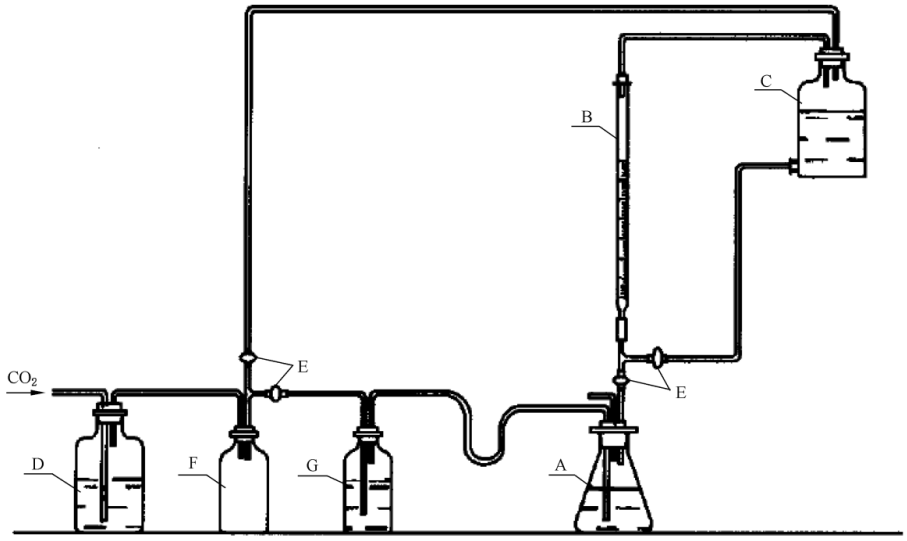

Description of Figure A.1:

- A — Conical flask (500 mL)
- B — Brown burette (50 mL)
- C — Lower-outlet glass bottle wrapped with black paper (2000 mL)
- D — Container containing equal parts mixture of ammonium carbonate and ferrous sulfate (5000 mL)
- E — Stopcock
- F — Empty bottle
- G — Gas washing bottle filled with water

A.4.1.4 Analytical Procedure

Weigh about 0.5 g of sample (accurate to 0.0001 g), place it in a 500 mL conical flask, and dissolve in 50 mL of freshly boiled water cooled to room temperature. Add 15 g of trisodium citrate and 150 mL of freshly boiled water. Shake to dissolve, set up the apparatus as shown in Figure A.1, pass carbon dioxide below the liquid surface while heating to boiling, and titrate with titanium trichloride standard titration solution until the inherent color of the sample solution disappears as the end point.

A.4.1.5 Calculation of Results

The mass fraction of Ponceau 4R content, w_1, is calculated according to formula (A.1):

$$w_1 = \frac{V \times c \times M}{m \times 1000 \times 4} \times 100\%$$

Where:

- V — Volume of titanium trichloride standard titration solution consumed by the sample titration, in milliliters (mL);

- c — Concentration of the titanium trichloride standard titration solution, in moles per liter (mol/L);
- M — Molar mass of Ponceau 4R, in grams per mole $[M(C_{20}H_{11}N_2Na_3O_{10}S_3 \cdot 1.5H_2O) = 631.51]$;
- m — Mass of the sample, in grams (g);
- 1000 — Volume conversion factor;
- 4 — Molar conversion factor.

The test result shall be based on the arithmetic mean of parallel determinations (rounded to 1 decimal place). The absolute difference between two independent determinations obtained under repeatability conditions shall not exceed 1.0% of the arithmetic mean.

A.4.2 Spectrophotometric Colorimetry

A.4.2.1 Summary of Method

Dissolve the sample and a Ponceau 4R reference standard of known content in water separately, measure their absorbances at the maximum absorption wavelength, and calculate the content.

A.4.2.2 Reagents and Materials

- A.4.2.2.1 Ammonium acetate solution: 1.5 g/L.
- A.4.2.2.2 Ponceau 4R reference standard: Content $\geq 85.0\%$ (determined according to A.4.1).

A.4.2.3 Instruments and Equipment

- A.4.2.3.1 Spectrophotometer.
- A.4.2.3.2 Cuvette: 10 mm.

A.4.2.4 Preparation of Ponceau 4R Reference Solution

Weigh about 0.5 g of Ponceau 4R reference standard (accurate to 0.0001 g), dissolve in an appropriate amount of water, transfer to a 1000 mL volumetric flask, dilute to the mark with water, and mix well. Accurately pipette 10 mL into a 500 mL volumetric flask, add ammonium acetate solution to dilute to the mark, mix well, and set aside (the absorbance value at the maximum wavelength should be between 0.3 and 0.7).

A.4.2.5 Preparation of Ponceau 4R Sample Solution

Weighing and operational procedures are the same as those for the preparation of the reference solution.

A.4.2.6 Analytical Procedure

Place the reference solution and sample solution into separate 10 mm cuvettes, measure their respective absorbances using a spectrophotometer at the maximum absorption wavelength using ammonium acetate solution as the reference.

A.4.2.7 Calculation of Results

The mass fraction of Ponceau 4R content is calculated according to formula (A.2):

$$w_1 = \frac{A_1 \times m_0}{A_0 \times m_1} \times w_0 \times 100\%$$

Where:

- A_1 — Absorbance of the sample solution;
- m_0 — Mass of the Ponceau 4R reference standard, in grams (g);
- A_0 — Absorbance of the Ponceau 4R reference solution;
- m_1 — Mass of the sample, in grams (g);
- w_0 — Mass fraction of the Ponceau 4R reference standard (determined according to A.4.1), %.

The test result shall be based on the arithmetic mean of parallel determinations (rounded to 1 decimal place). The absolute difference between two independent determinations obtained under repeatability conditions shall not exceed 1.0% of the arithmetic mean.

A.5 Determination of Loss on Drying, Total Chlorides (as NaCl), and Total Sulfates (as Na_2SO_4)

A.5.1 Determination of Loss on Drying

A.5.1.1 Summary of Method

The sample is placed in a weighing bottle and dried in a constant temperature drying oven to constant mass, then weighed.

A.5.1.2 Instruments and Equipment

Constant temperature drying oven.

A.5.1.3 Analytical Procedure

Weigh about 2 g of sample (accurate to 0.0001 g), place it in a $(30 \sim 40)$ mm weighing bottle pre-dried to constant mass at $135°C \pm 2°C$, and dry to constant mass at $135°C \pm 2°C$.

A.5.1.4 Calculation of Results

The mass fraction of loss on drying is calculated according to formula (A.3):

$$w_2 = \frac{m_3 - m_4}{m_5} \times 100\%$$

Where:

- m_3 — Mass of the weighing bottle and sample before drying, in grams (g);
- m_4 — Mass of the weighing bottle and sample after drying to constant mass, in grams (g);
- m_5 — Mass of the sample, in grams (g).

The test result shall be based on the arithmetic mean of parallel determinations (rounded to 1 decimal place). The absolute difference between two independent determinations obtained under repeatability conditions shall not exceed 0.2% of the arithmetic mean.

A.5.2 Determination of Chlorides (calculated as NaCl)

A.5.2.1 Summary of Method

Add a known amount of silver nitrate solution in an acidic medium to precipitate chloride ions as silver chloride, then add ammonium ferric sulfate solution as an indicator, and titrate the excess silver nitrate with ammonium thiocyanate standard titration solution.

A.5.2.2 Reagents and Materials

- A.5.2.2.1 Nitrobenzene.
- A.5.2.2.2 Nitric acid solution: 1 + 1.
- A.5.2.2.3 Silver nitrate solution: $c(AgNO_3) = 0.1$ mol/L.
- A.5.2.2.4 Ammonium ferric sulfate solution: Weigh 14 g of ammonium ferric sulfate, dissolve in 100 mL of water, filter, add 10 mL of nitric acid, and store in a brown bottle.
- A.5.2.2.5 Ammonium thiocyanate standard titration solution: $c(NH_4SCN) = 0.1$ mol/L.
- A.5.2.2.6 Activated carbon: 767 needle-type.

A.5.2.3 Preparation of Sample Solution

Weigh about 2 g of sample (accurate to 0.0001 g), dissolve in 150 mL of water, add about 15 g of activated carbon, and gently boil for 2 min to 3 min. Cool to room temperature, add 1 mL of nitric acid solution, stir continuously, and let stand for 30 min (stirring occasionally). Filter through dry filter paper. If the filtrate is colored, add another 5 g of activated carbon, let stand for 60 min (stirring occasionally), and filter again through dry filter paper (if still colored, replace the activated carbon and repeat until the filtrate is colorless). Wash the activated carbon 3 times with 10 mL of water each time, combine the filtrates into a 200 mL volumetric flask, dilute to the mark with water, and mix well. This is used for the determination of chloride and sulfate contents.

A.5.2.4 Analytical Procedure

Pipette 50 mL of the sample solution into a 500 mL conical flask, add 2 mL of nitric acid solution, 10 mL of silver nitrate solution (add more if chloride content is high), and 5 mL of nitrobenzene. Shake vigorously until the silver chloride coagulates. Add 1 mL of ammonium ferric sulfate test solution, titrate the excess silver nitrate with ammonium thiocyanate standard titration solution to the end point and maintain for 1 min. Perform a blank test simultaneously using the same method.

A.5.2.5 Calculation of Results

The mass fraction of chlorides (calculated as NaCl) is calculated according to formula (A.4):

$$w_3 = \frac{\frac{V_0 - V_1}{1000} \times c_1 \times M_1}{m_6 \times \frac{50}{200}} \times 100\%$$

Where:

- V_0 — Volume of ammonium thiocyanate standard titration solution consumed for the blank titration, in milliliters (mL);
- V_1 — Volume of ammonium thiocyanate standard titration solution consumed for the sample titration, in milliliters (mL);
- 1000 — Volume conversion factor;
- c_1 — Concentration of the ammonium thiocyanate standard titration solution, in moles per liter (mol/L);
- M_1 — Molar mass of sodium chloride, in grams per mole $[M(NaCl) = 58.44]$;
- m_6 — Mass of the sample, in grams (g);
- 50 — Volume of sample solution pipetted, in milliliters (mL);
- 200 — Total volume of the sample solution prepared, in milliliters (mL).

The test result shall be based on the arithmetic mean of parallel determinations (rounded to 1 decimal place). The absolute difference between two independent determinations obtained under repeatability conditions shall not exceed 0.3% of the arithmetic mean.

A.5.3 Determination of Sulfates (calculated as Na_2SO_4)

A.5.3.1 Summary of Method

Add barium chloride standard titration solution dropwise to precipitate sulfate ions as barium sulfate, using sodium rhodizonate indicator as an external indicator to determine the titration end point.

A.5.3.2 Reagents and Materials

- A.5.3.2.1 Sodium hydroxide solution: 0.2 g/L.
- A.5.3.2.2 Hydrochloric acid solution: $1 + 19$.

- A.5.3.2.3 Barium chloride standard titration solution: $c\left(\frac{1}{2}BaCl_2\right) = 0.1$ mol/L (preparation method described in Appendix C).
- A.5.3.2.4 Phenolphthalein indicator solution: 10 g/L.
- A.5.3.2.5 Sodium rhodizonate indicator solution: Weigh 0.1 g of sodium rhodizonate, dissolve in 10 mL of water (prepare before use).

A.5.3.3 Analytical Procedure

Pipette 25 mL of the sample solution (A.5.2.3) into a 250 mL conical flask, add 1 drop of phenolphthalein indicator solution, add sodium hydroxide solution dropwise until pink, then add hydrochloric acid solution dropwise until the pink color disappears. Shake well, and while stirring continuously, titrate with barium chloride standard titration solution using sodium rhodizonate indicator as an external indicator. The end point is reached when a rose-red spot appears at the intersection of the reaction liquid and the indicator on the filter paper and persists for 2 min without fading. Perform a blank test simultaneously using the same method.

A.5.3.4 Calculation of Results

The mass fraction of sulfates (calculated as Na_2SO_4) is calculated according to formula (A.5):

$$w_4 = \frac{\frac{V_3 - V_2}{1000} \times c_2 \times \frac{M_2}{2}}{m_8 \times \frac{25}{200}} \times 100\%$$

Where:

- V_3 — Volume of barium chloride standard titration solution consumed for the sample test solution, in milliliters (mL);
- V_2 — Volume of barium chloride standard titration solution consumed for the blank solution, in milliliters (mL);
- 1000 — Volume conversion factor;
- c_2 — Concentration of the barium chloride standard titration solution, in moles per liter (mol/L);
- M_2 — Molar mass of sodium sulfate, in grams per mole [$M(Na_2SO_4) = 142$];
- 2 — Molar conversion factor;
- m_8 — Mass of the sample, in grams (g);
- 25 — Volume of sample solution pipetted, in milliliters (mL);
- 200 — Total volume of the sample solution prepared, in milliliters (mL).

The test result shall be based on the arithmetic mean of parallel determinations (rounded to 1 decimal place). The absolute difference between two independent determinations obtained under repeatability conditions shall not exceed 0.2% of the arithmetic mean.

A.5.4 Calculation of Total Loss on Drying, Chlorides (as NaCl), and Sulfates (as Na_2SO_4)

The total mass fraction of loss on drying, chlorides, and sulfates, w_5, is calculated according to formula (A.6):

$$w_5 = w_2 + w_3 + w_4$$

Where:

- w_2 — Mass fraction of loss on drying, %;
- w_3 — Mass fraction of chlorides (calculated as NaCl), %;
- w_4 — Mass fraction of sulfates (calculated as Na_2SO_4), %.

The calculation result is expressed to 1 decimal place.

A.6 Determination of Water-Insoluble Matter

A.6.1 Summary of Method

After dissolution and filtration, the sample's insoluble matter is dried in a constant temperature drying oven to constant mass and then weighed.

A.6.2 Instruments and Equipment

- A.6.2.1 Glass sintered crucible (G): Pore size 5 μm ~ 15 μm.
- A.6.2.2 Constant temperature drying oven.

A.6.3 Analytical Procedure

Weigh about 3 g of sample (accurate to 0.001 g), place it in a 500 mL beaker, add 250 mL of water at 50°C ~ 60°C to dissolve it. Filter through a glass sintered crucible (G) pre-dried to constant mass at 135°C ± 2°C, wash thoroughly with hot water until the filtrate is colorless, and dry to constant mass in a constant temperature drying oven at 135°C ± 2°C.

A.6.4 Calculation of Results

The mass fraction of water-insoluble matter, w_6, is calculated according to formula (A.7):

$$w_6 = \frac{m_7 - m_6}{m_9} \times 100\%$$

Where:

- m_7 — Mass of water-insoluble matter and glass sintered crucible after drying, in grams (g);
- m_6 — Mass of the glass sintered crucible, in grams (g);
- m_9 — Mass of the sample, in grams (g).

The test result shall be based on the arithmetic mean of parallel determinations (rounded to 2 decimal places). The absolute difference between two independent determinations obtained under repeatability conditions shall not exceed 0.2% of the arithmetic mean.

A.7 Determination of Subsidiary Dyes

A.7.1 Summary of Method

Separate the components by paper chromatography, elute them, and then quantify them spectrophotometrically.

A.7.2 Reagents and Materials

- A.7.2.1 Absolute ethanol.
- A.7.2.2 n-Butanol.
- A.7.2.3 Acetone solution: $1 + 1$.
- A.7.2.4 Ammonia solution: $4 + 96$.
- A.7.2.5 Sodium bicarbonate solution: 4 g/L.

A.7.3 Instruments and Equipment

- A.7.3.1 Spectrophotometer.
- A.7.3.2 Chromatographic filter paper: No. 1 medium speed, 150 mm $\times$ 250 mm.
- A.7.3.3 Chromatographic tank: $\approx$ 240 mm $\times$ 300 mm.
- A.7.3.4 Micro-injector: 100 μL.
- A.7.3.5 Nessler colorimetric tube: 50 mL with glass ground stopper.
- A.7.3.6 Glass sintered funnel (G): Pore size 15 μm $\sim$ 40 μm.
- A.7.3.7 50 mm cuvette.
- A.7.3.8 10 mm cuvette.

A.7.4 Analytical Procedure

A.7.4.1 Paper Chromatography Conditions

- A.7.4.1.1 Developing solvent: n-butanol + absolute ethanol + ammonia solution = $6 + 2 + 3$.
- A.7.4.1.2 Temperature: 20°C $\sim$ 25°C.

A.7.4.2 Preparation of Sample Solution

Weigh about 1 g of sample (accurate to 0.001 g), place in a beaker, dissolve with an appropriate amount of water, transfer to a 100 mL volumetric flask, dilute to the mark, mix well. The concentration of this sample solution is 1%.

A.7.4.3 Preparation of Sample Eluate

Use a micro-injector to draw 100 μL of sample solution, evenly spot it on a baseline 25 mm from the bottom edge of the filter paper in a straight line, keeping the width on the filter paper within 5 mm and length 130 mm. Dry with a hairdryer. Place the filter paper into a chromatographic tank containing the pre-prepared developing solvent, with the bottom edge of the filter paper immersed 10 mm below the solvent surface. Allow the solvent front to rise to 150 mm or until the separation of subsidiary dyes is satisfactory. Remove the chromatographic filter paper and dry it with cold air. Run a blank filter paper under the same conditions; this blank paper should be cut from an adjacent section of the same sheet of filter paper used above. The schematic diagram of subsidiary dye paper chromatography is shown in Figure A.2.

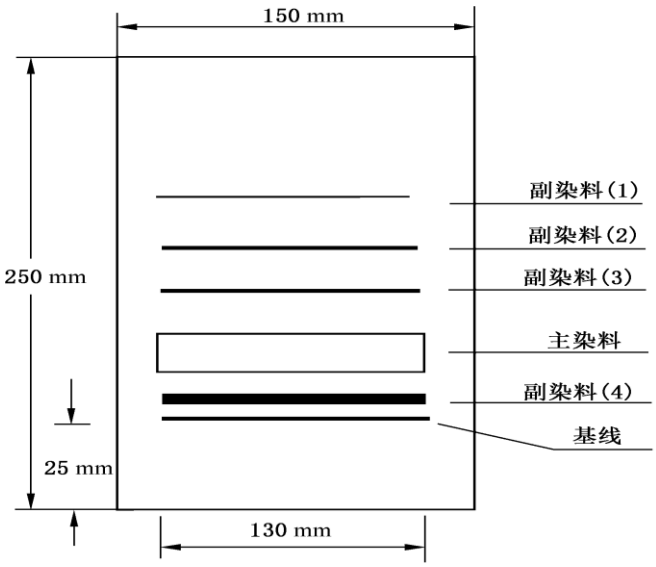

Cut out each separated subsidiary dye and the corresponding blank filter paper sections of the same size into fine strips (5 mm × 15 mm), place them into 50 mL Nessler colorimetric tubes, accurately add 5 mL of acetone solution. After shaking for 3 min to 5 min, accurately add 20 mL of sodium bicarbonate solution, shake thoroughly, and filter naturally through glass sintered funnels (G). The filtrate should be clear and free of suspended matter. The eluates for each subsidiary dye and the blank are obtained. Measure the absorbance of each subsidiary dye eluate using a 50 mm cuvette at their respective maximum absorption wavelengths on a spectrophotometer, using a mixture of 5 mL acetone solution and 20 mL sodium bicarbonate solution as the reference solution.

A.7.4.4 Preparation of Standard Solution

Pipette 2 mL of the 1% sample solution into a 100 mL volumetric flask, dilute to the mark, and mix well. This solution serves as the standard solution.

A.7.4.5 Preparation of Standard Eluate

Use a micro-injector to draw 100 μL of standard solution, evenly spot it on a baseline 25 mm from the bottom edge of filter paper, and dry with a hairdryer. Place the filter paper into a chromatographic tank with developing solvent. When the solvent front rises 40 mm, remove and

dry with cold air. Cut out all developed dye parts and treat according to A.7.4.3 to obtain the standard eluate. Measure absorbance using a 10 mm cuvette at the maximum absorption wavelength. Simultaneously run a blank filter paper under identical conditions to measure the absorbance of the blank eluate.

A.7.4.6 Calculation of Results

The mass fraction of subsidiary dyes, w_7, is calculated according to formula (A.8):

$$w_7 = \frac{\sum(A_x - b_x) \times 5 \times 100}{(A_s - b_s) \times 2 \times 100} \times w_1 \times 100\%$$

(Note: Simplified representation based on standard formula variables for optical path and dilutions)

The calculation result is expressed to 1 decimal place. The absolute difference between two independent determinations under repeatability conditions shall not exceed 0.2% of the arithmetic mean.

A.8 Determination of the Sum of Unreacted Intermediates

A.8.1 Summary of Method

Reverse-phase high-performance liquid chromatography (HPLC) with an external standard method is used to quantify each unreacted intermediate separately, and the total mass fraction of unreacted intermediates is calculated.

A.8.2 Reagents and Materials

- A.8.2.1 Methanol.
- A.8.2.2 Ammonium acetate solution: 0.02 mol/L.
- A.8.2.3 Sodium 1-naphthylamine-4-sulfonate.
- A.8.2.4 Sodium 7-hydroxy-1,3-naphthalenedisulfonate.
- A.8.2.5 Sodium 3-hydroxy-2,7-naphthalenedisulfonate.
- A.8.2.6 Sodium 6-hydroxy-2-naphthalenesulfonate.

A.8.3 Instruments and Equipment

- A.8.3.1 HPLC: Delivery pump (flow rate range 0.1 mL/min ~ 5.0 mL/min, flow stability $\pm$1%), multi-wavelength UV detector.
- A.8.3.2 Chromatographic column: Stainless steel column, length 150 mm, internal diameter 4.6 mm, stationary phase C_{18}, particle size 5 μm.
- A.8.3.3 Chromatographic workstation or integrator.
- A.8.3.4 Ultrasonic generator.
- A.8.3.5 Sample loop: 20 μL.
- A.8.3.6 Micro-syringe: 20 μL ~ 100 μL.

A.8.4 Reference Chromatographic Conditions

- A.8.4.1 Detection wavelength: 238 nm.
- A.8.4.2 Column temperature: 40°C.
- A.8.4.3 Mobile phase: A: Ammonium acetate solution; B: Methanol.
    - Concentration gradient: Linear gradient from $A:B = 100:0$ (volume ratio) to $A:B = 60:40$ within 40 min.
- A.8.4.4 Flow rate: 1 mL/min.
- A.8.4.5 Injection volume: 20 μL.

A.8.5 Preparation of Sample Solution

Weigh about 0.1 g of sample (accurate to 0.0001 g), dissolve in ammonium acetate solution, and dilute to 100 mL.

A.8.6 Preparation of Standard Solutions

Weigh separately about 0.01 g (accurate to 0.0001 g) of 1-naphthylamine-4-sulfonic acid, 2-naphthol-6,8-disulfonic acid, 2-naphthol-3,6-disulfonic acid, and 6-hydroxy-2-naphthalenesulfonic acid dried in a vacuum desiccator for 24h. Dissolve with ammonium acetate solution and make up to 100 mL. Then pipette 10.0 mL, 5.0 mL, 2.0 mL, and 1.0 mL of these standard solutions respectively, dilute to 100 mL with ammonium acetate solution to prepare a series of standard solutions.

A.8.7 Analytical Procedure

Inject sample and standard solutions into the HPLC under conditions specified in A.8.4. Measure peak areas and plot standard curves. Determine peak areas of intermediates in the sample solution and obtain their mass fractions from the standard curves.

A.8.8 Calculation of Results

The mass fraction of the sum of unreacted intermediates, w_{12}, is calculated according to formula (A.9):

$$w_{12} = w_8 + w_9 + w_{10} + w_{11}$$

Where:

- w_8 — Mass fraction of 1-naphthylamine-4-sulfonic acid, %;
- w_9 — Mass fraction of 2-naphthol-6,8-disulfonic acid, %;
- w_{10} — Mass fraction of 2-naphthol-3,6-disulfonic acid, %;
- w_{11} — Mass fraction of 6-hydroxy-2-naphthalenesulfonic acid, %.

A.9 Determination of Un-sulfonated Aromatic Primary Amines (calculated as aniline)

A.9.1 Summary of Method

Extract un-sulfonated aromatic primary amines from the sample with ethyl acetate, diazotize and couple the extract and aniline standard solution separately, and compare their absorbances spectrophotometrically.

A.9.2 Reagents and Materials

- Ethyl acetate, hydrochloric acid solutions, potassium bromide solution, sodium carbonate solution, sodium hydroxide solutions, R salt solution, sodium nitrite solution, and aniline standard solution (0.1000 g/L).

A.9.3 Instruments and Equipment

- A.9.3.1 Visible spectrophotometer.
- A.9.3.2 Cuvette: 40 mm.

A.9.4 Preparation of Sample Solution

Weigh about 2 g of sample (accurate to 0.001 g) in a beaker, add 100 mL water and 5 mL sodium hydroxide solution (40 g/L), stir in warm water bath until dissolved. Extract twice with 50 mL ethyl acetate each time, combine extracts, wash with sodium hydroxide, back-extract with hydrochloric acid, dilute to 100 mL with water.

A.9.5 Preparation of Standard Reference Solution

Pipette 2.0 mL aniline standard solution into a 100 mL volumetric flask, dilute to mark with hydrochloric acid solution (1 + 10).

A.9.6 Preparation of Diazotization-Coupling Solution

Perform diazotization and coupling reactions on the sample and standard solutions using potassium bromide, sodium nitrite, and R salt solutions in an ice-water bath.

A.9.7 Preparation of Blank Solution

Pipette 10 mL hydrochloric acid solution (1 + 10), 10 mL sodium carbonate solution, and 1 mL R salt solution into a 25 mL volumetric flask, and dilute to volume with water.

A.9.8 Analytical Procedure

Measure absorbances of the standard and sample diazotization-coupling solutions at 510 nm using a spectrophotometer with the blank solution as reference.

A.9.9 Judgment of Results

$A_s \leq A_0$ indicates compliance, meaning it is not greater than 0.01%. *(Where A_0 is the absorbance of the standard diazotization-coupling solution; A_s is the absorbance of the sample diazotization-coupling solution).*

Appendix B

Preparation Method of Titanium Trichloride Standard Titration Solution

B.1 Reagents and Materials

- B.1.1 Hydrochloric acid.
- B.1.2 Ammonium ferrous sulfate.
- B.1.3 Ammonium thiocyanate solution: 200 g/L.
- B.1.4 Sulfuric acid solution: $1 + 1$.
- B.1.5 Ferric chloride solution.
- B.1.6 Potassium dichromate standard titration solution: $c\left(\frac{1}{6}K_2Cr_2O_7\right) = 0.1$ mol/L.

B.2 Instruments and Equipment

The titration apparatus diagram is shown in Figure A.1.

B.3 Preparation of Titanium Trichloride Standard Titration Solution

B.3.1 Preparation

Take an appropriate amount of ferric chloride solution and 75 mL of hydrochloric acid, place them in a 1000 mL brown volumetric flask, dilute to the mark with freshly boiled water that has been cooled to room temperature, mix well, and immediately pour into a dark lower-outlet bottle, storing under carbon dioxide gas protection.

B.3.2 Standardization

Weigh about 3 g (accurate to 0.0001 g) of ammonium ferrous sulfate, place it in a 500 mL conical flask, and under the protective flow of carbon dioxide gas, add 50 mL of freshly boiled and cooled water to dissolve it. Then add 25 mL of sulfuric acid solution, continue passing the carbon dioxide gas flow below the liquid surface for protection, quickly and accurately add 35 mL of potassium dichromate standard titration solution, and then titrate with the titanium trichloride standard solution to be standardized until close to the calculated end point. Immediately add 25 mL of ammonium thiocyanate solution and continue titrating with the titanium trichloride standard solution to be standardized until the red color changes to green, which is the end point.

The entire titration process must be operated under the protection of carbon dioxide gas flow, and a blank test should be performed simultaneously.

B.3.3 Calculation of Results

The concentration of the titanium trichloride standard solution, $c(TiCl_3)$, in moles per liter (mol/L), is calculated according to formula (B.1):

$$c(TiCl_3) = \frac{V \times c}{V_1 - V_2}$$

Where:

- V — Volume of the potassium dichromate standard titration solution, in milliliters (mL);
- c — Concentration of the potassium dichromate standard titration solution, in moles per liter (mol/L);
- V_1 — Volume of the titanium trichloride standard titration solution consumed to titrate the iron oxidized by the potassium dichromate standard titration solution, in milliliters (mL);
- V_2 — Volume of the titanium trichloride standard titration solution consumed in the blank titration, in milliliters (mL).

The calculation result is expressed to 4 decimal places. The above standardization must be performed immediately at the time of sample analysis.

Appendix C

Preparation Method of Barium Chloride Standard Solution

C.1 Reagents and Materials

- C.1.1 Barium chloride.
- C.1.2 Aqueous ammonia.
- C.1.3 Sulfuric acid standard titration solution: $c\left(\frac{1}{2}H_2SO_4\right) = 0.1$ mol/L.
- C.1.4 Sodium rhodizonate indicator solution: Weigh 0.1 g of sodium rhodizonate, dissolve in 10 mL of water, prepare before use.
- C.1.5 Broad-range pH test paper.

C.2 Preparation

Weigh 12.25 g of barium chloride, dissolve in 500 mL of water, transfer to a 1000 mL volumetric flask, dilute to the mark, and mix well.

C.3 Standardization Method

Pipette 20 mL of the sulfuric acid standard titration solution into a 250 mL conical flask, add 50 mL of water, and neutralize with aqueous ammonia until the broad-range pH test paper shows 8. Then titrate with the barium chloride standard titration solution, using sodium rhodizonate indicator solution as an external indicator. The end point is reached when a rose-red spot appears at the intersection of the reaction liquid and the indicator on the filter paper and persists for 2 min without fading.

C.4 Calculation of Results

The concentration of the barium chloride standard titration solution, $c\left(\frac{1}{2}BaCl_2\right)$, in moles per liter (mol/L), is calculated according to formula (C.1):

$$c\left(\frac{1}{2}BaCl_2\right) = \frac{V \times c}{V_1}$$

Where:

- V — Volume of the sulfuric acid standard titration solution, in milliliters (mL);
- c — Concentration of the sulfuric acid standard titration solution, in moles per liter (mol/L);
- V_1 — Volume of the barium chloride standard titration solution consumed, in milliliters (mL).

The calculation result is expressed to 4 decimal places.

Appendix D

HPLC Chromatogram and Retention Times of Ponceau 4R Components

D.1 HPLC Chromatogram of Ponceau 4R

The schematic diagram of the Ponceau 4R liquid chromatogram is shown in Figure D.1.

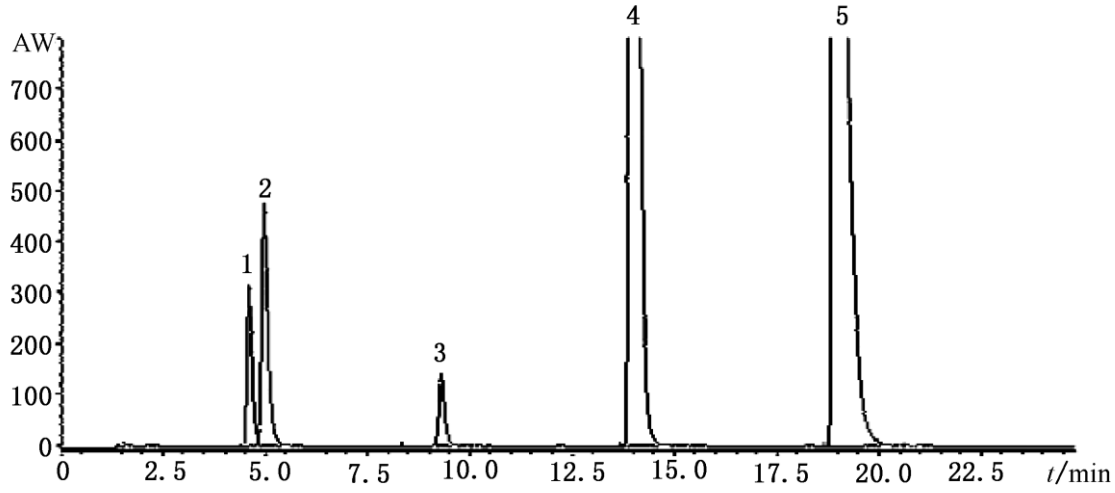

Description of Figure D.1:

- 1 — 2-Naphthol-6,8-disulfonic acid

- 2 — 2-Naphthol-3,6-disulfonic acid
- 3 — 1-Naphthylamine-4-sulfonic acid
- 4 — 6-Hydroxy-2-naphthalenesulfonic acid
- 5 — Ponceau 4R

D.2 Component Retention Times of Ponceau 4R

The retention times for each component of Ponceau 4R are shown in Table D.1.

Table D.1 — Component Retention Times of Ponceau 4R

Peak Number	Component Name	Retention Time / min
1	2-Naphthol-6,8-disulfonic acid	4.59
2	2-Naphthol-3,6-disulfonic acid	4.97
3	1-Naphthylamine-4-sulfonic acid	9.29
4	6-Hydroxy-2-naphthalenesulfonic acid	13.92
5	Ponceau 4R	18.88

Note: The retention times of each component may vary with different instruments, different separation columns, or even different injection times, but the elution order of each component remains unchanged.

END UNOFFICIAL TRANSLATION

5. Amendment to GB 1886.222—2016 National Food Safety Standard - Food Additive: Allura Red

Amendment item

Add the following “note” to Table 2 under “3.2 Physicochemical Indicators”

"Note: Commercialized liquid Allura Red products shall use Allura Red complying with this standard as the raw material, and may add food raw materials complying with corresponding standards and/or food additives complying with national food safety standards, including benzoic acid and its sodium salt, sorbic acid and its potassium salt, propylene glycol, glycerin, propylene glycol alginate, tweens, sorbitol, sorbitol solution, ascorbic acid (vitamin C), tertiary butylhydroquinone (TBHQ), vitamin E, as well as thickeners and acidity regulators. The Allura Red content and sensory requirements of commercialized products shall comply with claims; total indices of loss on drying, chlorides, and sulfates are not applicable to commercialized liquid

products. Except for the aforementioned indices, all other indices shall comply with the provisions of this standard."

BEGIN UNOFFICIAL TRANSLATION

GB 1886.222-2016 National Food Safety Standard Food Additive: Allura Red

Issued on: August 31, 2016

Implemented on: January 1, 2017

Published by the National Health and Family Planning Commission of the People's Republic of China

Preface

This standard replaces GB 17511.1-2008 *Food Additive Allura Red*.

Compared with GB 17511.1-2008, the main changes in this standard are as follows:

- The standard name is revised to "National Food Safety Standard - Food Additive Allura Red".
- The appearance index name is revised to sensory requirements.
- Loss on drying, chlorides (calculated as NaCl), and sulfates (calculated as Na_2SO_4) indices are combined.
- Deleted the index requirements and test methods for low-sulfonated subsidiary dyes, high-sulfonated subsidiary dyes, disodium 6-hydroxy-5-[(2-methoxy-5-methyl-4-sulfophenyl) azo]-8-(2-methoxy-5-methyl-4-sulfophenoxy)-2-naphthalenesulfonate, and heavy metals (calculated as Pb).
- Added index requirements and test methods for subsidiary dyes.
- Modified the test methods for arsenic and lead.

1 Scope

This standard applies to the food additive Allura Red, which is prepared by diazotizing 4-amino-5-methoxy-2-methylbenzenesulfonic acid as raw material, coupling it with sodium 6-hydroxy-2-naphthalenesulfonate, followed by salting out and refining.

2 Chemical Name, Molecular Formula, Structural Formula, and Relative Molecular Mass

2.1 Chemical Name

Disodium 6-hydroxy-5-[(2-methoxy-5-methyl-4-sulfophenyl)azo]-2-naphthalenesulfonate

2.2 Molecular Formula

$$C_{18}H_{14}N_2Na_2O_8S_2$$

2.3 Structural Formula

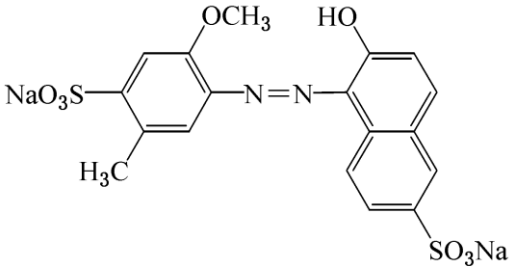

2.4 Relative Molecular Mass

496.42 (according to the 2013 international relative atomic masses)

3 Technical Requirements

3.1 Sensory Requirements

Sensory requirements shall comply with the specifications in Table 1.

Table 1 Sensory Requirements

Item	Requirement	Test Method
Color	Dark red	Place an appropriate amount of sample in a clean, dry white porcelain dish, and observe its color and state under natural light.
State	Powder or granules	

3.2 Physicochemical Indicators

Physicochemical indicators shall comply with the specifications in Table 2.

Table 2 Physicochemical Indicators

Item	Index	Test Method
Allura Red content, $w/\%$	≥ 85.0	Appendix A, A.4

Item	Index	Test Method
Total of loss on drying, chlorides (calculated as NaCl), and sulfates (calculated as Na_2SO_4), $w/\%$	≤ 15.0	Appendix A, A.5
Water-insoluble matter, $w/\%$	≤ 0.20	Appendix A, A.6
Subsidiary dyes, $w/\%$	≤ 3.0	Appendix A, A.7
Sodium 6-hydroxy-2-naphthalenesulfonate, $w/\%$	≤ 0.3	Appendix A, A.8
4-Amino-5-methoxy-2-methylbenzenesulfonic acid, $w/\%$	≤ 0.2	Appendix A, A.9
Disodium 6,6'-oxybis(2-naphthalenesulfonate), $w/\%$	≤ 1.0	Appendix A, A.10
Unsulfonated aromatic primary amines (calculated as aniline), %	≤ 0.01	Appendix A, A.11
Arsenic (As), / (mg/kg)	≤ 1.0	GB 5009.11 or GB 5009.76
Lead (Pb), / (mg/kg)	≤ 10.0	GB 5009.12 or GB 5009.75

(Note: See the No. 1 Amendment at the end of this document for additions to Table 2 regarding commercial liquid products).

Appendix A

Test Methods

A.1 Safety Precautions

Some reagents used in the test methods of this standard are toxic or corrosive. Appropriate safety and protection measures shall be taken during operation.

A.2 General Provisions

Unless otherwise specified, the reagents and water used in this standard refer to analytical purity reagents and grade 3 water specified in GB/T 6682. Standard titration solutions, standard solutions for impurity determination, preparations, and products used in the tests shall be prepared in accordance with GB/T 601, GB/T 602, and GB/T 603, unless otherwise specified. Aqueous solutions are meant when the solvent used to prepare a solution is not specified.

A.3 Identification Test

A.3.1 Reagents and Materials

- Ammonium acetate solution: 1.5 g/L.

A.3.2 Instruments and Equipment

- **A.3.2.1** Spectrophotometer.
- **A.3.2.2** Colorimetric cell: 10 mm.

A.3.3 Identification Methods

A.3.3.1 Dissolution Test

Weigh about 0.1 g of sample (accurate to 0.01 g), dissolve in 100 mL of water, yielding a clear red solution.

A.3.3.2 Absorbance Test

Weigh about 0.1 g of sample (accurate to 0.01 g), dissolve in 100 mL of ammonium acetate solution. Take 1 mL of this solution, add ammonium acetate solution to make 100 mL. The maximum absorption wavelength of this solution is 497 nm $\sim$ 501 nm. Note: The measured absorbance value should be between 0.3 and 0.7; otherwise, adjust the sample concentration.

A.4 Determination of Allura Red Content

A.4.1 Titanium Trichloride Titration Method (Arbitration Method)

A.4.1.1 Summary of Method

In an acidic medium, the azo group in the Allura Red structure is reduced and decomposed by titanium trichloride. The content is calculated based on the consumption volume of the titanium trichloride standard titration solution.

A.4.1.2 Reagents and Materials

- **A.4.1.2.1** Sodium hydrogen tartrate.
- **A.4.1.2.2** Titanium trichloride standard titration solution: $c(\mathrm{TiCl_3}) = 0.1$ mol/L (prepare freshly before use; preparation method detailed in Appendix B).
- **A.4.1.2.3** Carbon dioxide: content $\geq 99\%$.

A.4.1.3 Instruments and Equipment

The apparatus diagram for the titanium trichloride titration method is shown in Figure A.1.

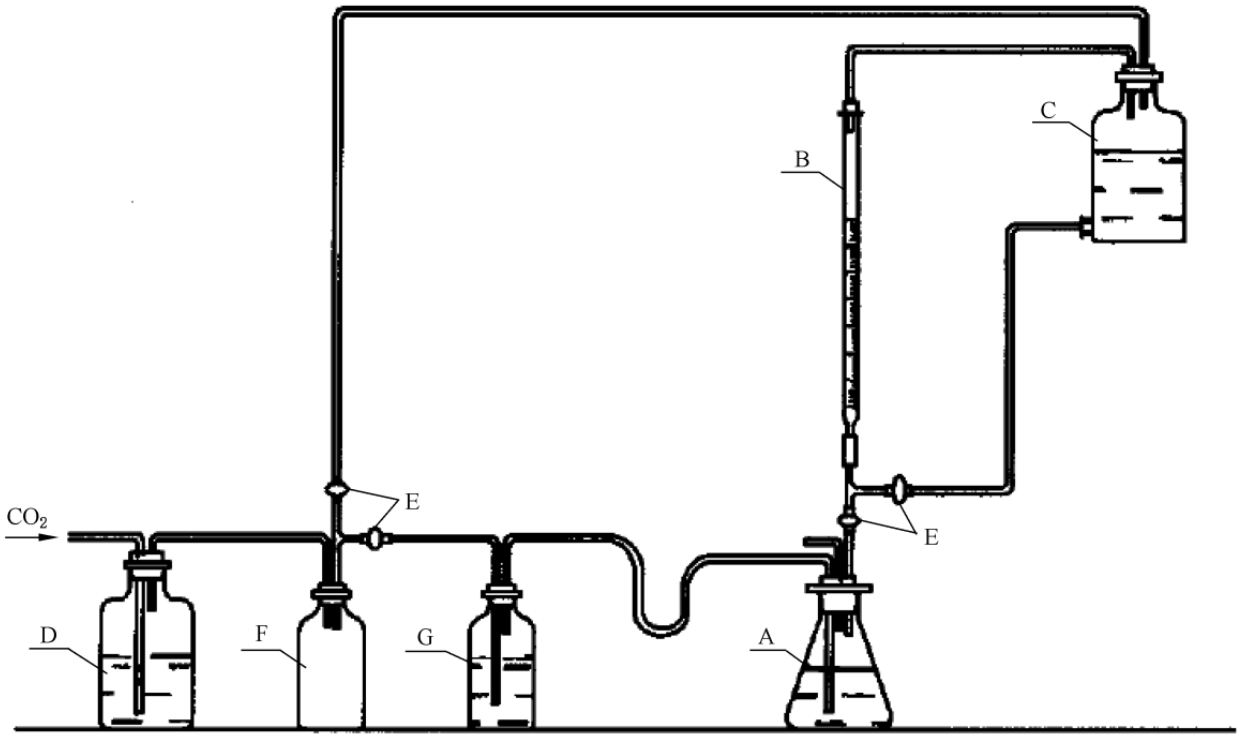

Description:

A —— Erlenmeyer flask (500 mL);

B ——— Brown buret (50 mL);

C ——— Glass bottle with lower mouth wrapped in black paper (2000 mL);

D ——— Container containing equal parts mixture of carbonic acid and ferrous sulfate (5000 mL);

E————piston;

F —— Empty bottle;

G ——— Gas cleaning bottle filled with water.

A.4.1.4 Analytical Procedure

Weigh about 0.5 g of sample (accurate to 0.0001 g), place in a 500 mL Erlenmeyer flask, dissolve in 50 mL of freshly boiled water cooled to room temperature. Add 15 g of sodium hydrogen tartrate and 150 mL of freshly boiled water. Shake to dissolve, set up the apparatus as shown in Figure A.1, pass carbon dioxide below the liquid surface while boiling, and titrate with titanium trichloride standard titration solution until the inherent color of the sample solution disappears as the endpoint.

A.4.1.5 Calculation of Results

The mass fraction of Allura Red content, w_1, is calculated according to formula (A.1):

$$w_1 = \frac{V \times c \times M}{m \times 1000 \times 4} \times 100\%$$

Where:

- V — Volume of titanium trichloride standard titration solution consumed by the sample titration, in milliliters (mL);
- c — Concentration of the titanium trichloride standard titration solution, in moles per liter (mol/L);
- M — Molar mass of Allura Red, in grams per mole [$M(C_{18}H_{14}N_2Na_2O_8S_2) = 496.42$], in g/mol;
- m — Mass of the sample, in grams (g);
- 1000 — Volume conversion factor;
- 4 — Mole conversion factor.

The test result is based on the arithmetic means of parallel determination results (retain to 1 decimal place). The absolute difference between two independent determination results obtained under repeatability conditions shall not exceed 1.0% of the arithmetic mean.

A.4.2 Spectrophotometric Colorimetry

A.4.2.1 Summary of Method

Dissolve the sample and an Allura Red reference substance of known content in water respectively, measure their absorbances at the maximum absorption wavelength, and then calculate the content.

A.4.2.2 Reagents and Materials

- **A.4.2.2.1** Ammonium acetate solution: 1.5 g/L.
- **A.4.2.2.2** Allura Red reference substance: content $\geq 85.0\%$ (determined according to A.4.1).

A.4.2.3 Instruments and Equipment

- **A.4.2.3.1** Spectrophotometer.
- **A.4.2.3.2** Colorimetric cell: 10 mm.

A.4.2.4 Preparation of Allura Red Reference Solution

Weigh about 0.5 g of Allura Red reference substance (accurate to 0.0001 g), dissolve in an appropriate amount of water, transfer to a 1000 mL volumetric flask, dilute to the mark with water, and mix well. Accurately pipette 10 mL, transfer to a 500 mL volumetric flask, add

ammonium acetate solution to dilute to the mark, mix well, and reserve (the absorbance value at the maximum absorption wavelength should be between 0.3 and 0.7).

A.4.2.5 Preparation of Allura Red Sample Solution

Weighing and operational procedures are the same as in A.4.2.4.

A.4.2.6 Analytical Procedure

Place the Allura Red reference solution and the Allura Red sample solution into 10 mm colorimetric cells respectively, measure their respective absorbances with a spectrophotometer at the maximum absorption wavelength, using ammonium acetate solution as the reference liquid.

A.4.2.7 Calculation of Results

The mass fraction of Allura Red content is calculated according to formula (A.2):

$$w_1 = \frac{A_1 \times m_0}{A_0 \times m_1} \times w_0 \times 100\%$$

Where:

- A_1 — Absorbance of the sample solution;
- m_0 — Mass of the Allura Red reference substance, in grams (g);
- A_0 — Absorbance of the Allura Red reference solution;
- m_1 — Mass of the sample, in grams (g);
- w_0 — Mass fraction of the Allura Red reference substance (determined according to A.4.1), %.

The test result is based on the arithmetic means of parallel determination results (retain to 1 decimal place). The absolute difference between two independent determination results obtained under repeatability conditions shall not exceed 1.0% of the arithmetic mean.

A.5 Determination of Total Loss on Drying, Chlorides (calculated as NaCl), and Sulfates (calculated as Na_2SO_4)

A.5.1 Determination of Loss in Drying

A.5.1.1 Summary of Method

The sample is placed in a weighing bottle, dried in an electric constant-temperature drying oven to constant mass, and then the dried substance is weighed.

A.5.1.2 Instruments and Equipment

Constant temperature drying oven.

A.5.1.3 Analytical Procedure

Weigh about 2 g of sample (accurate to 0.0001 g), place in a Φ30 mm ~ Φ40 mm weighing bottle that has been dried to constant mass at 135°C ± 2°C, and dry to constant mass in a constant temperature drying oven at 135°C ± 2°C.

A.5.1.4 Calculation of Results

The mass fraction of loss on drying is calculated according to formula (A.3):

$$w_2 = \frac{m_2 - m_3}{m_4} \times 100\%$$

Where:

- m_2 — Mass of the sample and weighing bottle before drying, in grams (g);
- m_3 — Mass of the sample and weighing bottle after drying to constant mass, in grams (g);
- m_4 — Mass of the sample, in grams (g).

The test result is based on the arithmetic means of parallel determination results (retain to 1 decimal place). The absolute difference between two independent determination results obtained under repeatability conditions shall not exceed 0.2% of the arithmetic mean.

A.5.2 Determination of Chlorides (calculated as NaCl)

A.5.2.1 Summary of Method

A known amount of silver nitrate solution is added in an acidic medium to precipitate chloride ions in the form of silver chloride. Then, ferric ammonium sulfate solution is added as an indicator, and excess silver nitrate is titrated with ammonium thiocyanate standard titration solution.

A.5.2.2 Reagents and Materials

- **A.5.2.2.1** Nitrobenzene.
- **A.5.2.2.2** Nitric acid solution: 1 + 1.
- **A.5.2.2.3** Silver nitrate solution: $c(\mathrm{AgNO_3}) = 0.1$ mol/L.
- **A.5.2.2.4** Ferric ammonium sulfate solution: Weigh 14 g of ferric ammonium sulfate, dissolve in 100 mL of water, filter, add 10 mL of nitric acid, and store in a brown bottle.
- **A.5.2.2.5** Ammonium thiocyanate standard titration solution: $c(\mathrm{NH_4SCN}) = 0.1$ mol/L.
- **A.5.2.2.6** Activated carbon: 767 needle-type.

A.5.2.3 Preparation of Sample Solution

Weigh about 2 g of sample (accurate to 0.0001 g), dissolve in 150 mL of water, add about 15 g of activated carbon, gently boil for 2 min ~ 3 min, cool to room temperature, add 1 mL of nitric

acid solution while continuously shaking evenly, and let stand for 30 min (shaking occasionally during this time). Filter with dry filter paper. If the filtrate is colored, add another 5 g of activated carbon, let stand for 1 h with occasional shaking, and filter again with dry filter paper (if still colored, replace the activated carbon and repeat the operation until the filtrate is colorless). Wash the activated carbon 3 times with 10 mL of water each time, combine the filtrates into a 200 mL volumetric flask, add water to the mark, and mix well. Used for the determination of chloride and sulfate contents.

A.5.2.4 Analytical Procedure

Pipette 50 mL of the sample solution into a 500 mL Erlenmeyer flask, add 2 mL of nitric acid solution, 10 mL of silver nitrate solution (add more appropriately if chloride content is high), and 5 mL of nitrobenzene. Shake vigorously until silver chloride coagulates, add 1 mL of ferric ammonium sulfate test solution, titrate the excess silver nitrate with ammonium thiocyanate standard titration solution to the endpoint and maintain for 1 min, and conduct a blank test in the same manner simultaneously.

A.5.2.5 Calculation of Results

The mass fraction of chlorides (calculated as NaCl) is calculated according to formula (A.4):

$$w_3 = \frac{(V_1 - V_0) \times c_1 \times M_1}{m_5 \times 1000 \times \frac{50}{200}} \times 100\%$$

Where:

- V_1 — Volume of ammonium thiocyanate standard titration solution consumed for titrating the blank solution, in milliliters (mL);
- V_0 — Volume of ammonium thiocyanate standard titration solution consumed for titrating the sample, in milliliters (mL);
- c_1 — Concentration of the ammonium thiocyanate standard titration solution, in moles per liter (mol/L);
- M_1 — Molar mass of sodium chloride, in grams per mole [$M(\text{NaCl}) = 58.44$], in g/mol;
- m_5 — Mass of the sample, in grams (g);
- 1000 — Volume conversion factor;
- 50 — Volume of the sample solution pipetted, in milliliters (mL);
- 200 — Volume of the prepared sample solution, in milliliters (mL).

The test result is based on the arithmetic means of parallel determination results (retain to 1 decimal place). The absolute difference between two independent determination results obtained under repeatability conditions shall not exceed 0.3% of the arithmetic mean.

A.5.3 Determination of Sulfates (calculated as Na_2SO_4)

A.5.3.1 Summary of Method

Barium chloride standard titration solution is added dropwise to the sample to precipitate sulfate ions in the form of barium sulfate. Sodium rhodizonate indicator solution is used as an external indicator to determine the titration endpoint.

A.5.3.2 Reagents and Materials

- **A.5.3.2.1** Sodium hydroxide solution: 0.2 g/L.
- **A.5.3.2.2** Hydrochloric acid solution: 1 + 1999.
- **A.5.3.2.3** Barium chloride standard titration solution: $c\left(\frac{1}{2}\mathrm{BaCl_2}\right) = 0.1$ mol/L (preparation method detailed in Appendix C).
- **A.5.3.2.4** Phenolphthalein indicator solution: 10 g/L.
- **A.5.3.2.5** Sodium rhodizonate indicator solution: Weigh 0.1 g of sodium rhodizonate, dissolve in 10 mL of water (prepare freshly before use).

A.5.3.3 Analytical Procedure

Pipette 25 mL of the sample solution (A.5.2.3) into a 250 mL Erlenmeyer flask, add 1 drop of phenolphthalein indicator solution, add sodium hydroxide solution dropwise until pink, then add hydrochloric acid solution dropwise until the pink color disappears, mix well, dissolve, and titrate with barium chloride standard titration solution under continuous shaking. Use sodium rhodizonate indicator solution as an external indicator. The endpoint is reached when the reaction liquid and indicator intersect on the filter paper to form a rose-red spot that remains unfaded for 2 min. Conduct a blank test in the same manner simultaneously.

A.5.3.4 Calculation of Results

The mass fraction of sulfates (calculated as $\mathrm{Na_2SO_4}$) is calculated according to formula (A.5):

$$w_4 = \frac{(V_3 - V_2) \times c_2 \times M_2}{m_5 \times 1000 \times 2 \times \frac{25}{200}} \times 100\%$$

Where:

- V_3 — Volume of barium chloride standard titration solution consumed for titrating the test solution, in milliliters (mL);
- V_2 — Volume of barium chloride standard titration solution consumed for titrating the blank solution, in milliliters (mL);
- c_2 — Concentration of the barium chloride standard titration solution, in moles per liter (mol/L);
- M_2 — Molar mass of sodium sulfate, in grams per mole [$M(\mathrm{Na_2SO_4}) = 142$], in g/mol;
- m_5 — Mass of the test material, in grams (g);
- 1000 — Volume conversion factor;
- 2 — Mole conversion factor;
- 25 — Volume of the sample solution pipetted, in milliliters (mL);
- 200 — Volume of the prepared sample solution, in milliliters (mL).

The test result is based on the arithmetic means of parallel determination results (retain to 1 decimal place). The absolute difference between two independent determination results obtained under repeatability conditions shall not exceed 0.2% of the arithmetic mean.

A.5.4 Calculation of Results for Total Loss on Drying, Chlorides (NaCl), and Sulfates (Na_2SO_4)

The mass fraction w_5 of the total loss on drying, chlorides (calculated as NaCl), and sulfates (calculated as Na_2SO_4) is calculated according to formula (A.6):

$$w_5 = w_2 + w_3 + w_4$$

Where:

- w_2 — Mass fraction of loss on drying, %;
- w_3 — Mass fraction of chlorides (calculated as NaCl), %;
- w_4 — Mass fraction of sulfates (calculated as Na_2SO_4), %.

The calculation result is expressed to 1 decimal place.

A.6 Determination of Water-Insoluble Matter

A.6.1 Summary of Method

After the sample is dissolved and filtered, it is dried in a constant temperature drying oven to constant mass, and the insoluble matter is weighed.

A.6.2 Instruments and Equipment

- **A.6.2.1** Glass sintered-disc crucible (G): Pore size 5 μm ~ 15 μm.
- **A.6.2.2** Constant temperature drying oven.

A.6.3 Analytical Procedure

Weigh about 3 g of sample (accurate to 0.001 g), place in a 500 mL beaker, add 250 mL of water at 50°C ~ 60°C to dissolve it. Filter with a glass sintered-disc crucible (G) that has been dried to constant mass at 135°C ± 2°C, wash thoroughly with hot water until the washing liquid is colorless, and dry to constant mass in a constant temperature drying oven at 135°C ± 2°C.

A.6.4 Calculation of Results

The mass fraction of water-insoluble matter is calculated according to formula (A.7):

$$w_6 = \frac{m_7 - m_6}{m_8} \times 100\%$$

Where:

- m_7 — Mass of the water-insoluble matter and glass sintered-disc crucible after drying, in grams (g);
- m_6 — Mass of the glass sintered-disc crucible, in grams (g);
- m_8 — Mass of the sample, in grams (g).

The test result is based on the arithmetic means of parallel determination results (retain to 1 decimal place). The absolute difference between two independent determination results obtained under repeatability conditions shall not exceed 0.2% of the arithmetic mean.

A.7 Determination of Subsidiary Dyes

A.7.1 Summary of Method

The components are separated and eluted using paper chromatography and then quantified spectrophotometrically.

A.7.2 Reagents and Materials

- **A.7.2.1** 2-Butanone.
- **A.7.2.2** Acetone.
- **A.7.2.3** Acetone solution: 1 + 1.
- **A.7.2.4** Sodium bicarbonate solution: 4 g/L.

A.7.3 Instruments and Equipment

- **A.7.3.1** Spectrophotometer.
- **A.7.3.2** Chromatographic filter paper: No. 1 medium speed, 150 mm × 250 mm.
- **A.7.3.3** Chromatographic tank: Φ240 mm × 300 mm.
- **A.7.3.4** Micro-injector: 100 μL.
- **A.7.3.5** Nessler colorimetric tube: 50 mL with glass ground stopper.
- **A.7.3.6** Glass sintered-disc funnel (G): Pore size 15 μm ~ 40 μm.
- **A.7.3.7** 50 mm colorimetric cell.
- **A.7.3.8** 10 mm colorimetric cell.

A.7.4 Analytical Procedure

A.7.4.1 Paper Chromatography Conditions

- **A.7.4.1.1** Developing solvent: 2-butanone : acetone : water = 7: 3: 3.
- **A.7.4.1.2** Temperature: 20°C ~ 25°C.

A.7.4.2 Preparation of Sample Solution

Weigh about 1 g of sample (accurate to 0.001 g), place in a beaker, add an appropriate amount of water to dissolve, transfer to a 100 mL volumetric flask, dilute to the mark, and mix well for reserve. The concentration of this sample solution is 1%.

A.7.4.3 Preparation of Sample Eluate

Use a micro-injector to draw 100 μL of sample solution, inject it evenly onto a baseline 25 mm away from the bottom edge of the filter paper in a straight line, keeping its width on the filter paper no more than 5 mm and length 130 mm, and blow dry with a hair dryer. Place the filter paper into a chromatographic tank containing the pre-prepared developing solvent, immersing the bottom edge of the filter paper 10 mm below the developing solvent surface. Wait until the developing solvent front rises to 150 mm or until the subsidiary dyes are satisfactorily separated. Take out the chromatographic filter paper and blow dry with cold air. Develop a blank filter paper under the same conditions; this blank filter paper should be cut from an adjacent part of the same sheet of filter paper used in the above step. The schematic diagram of paper chromatography for subsidiary dyes is shown in Figure A.2.

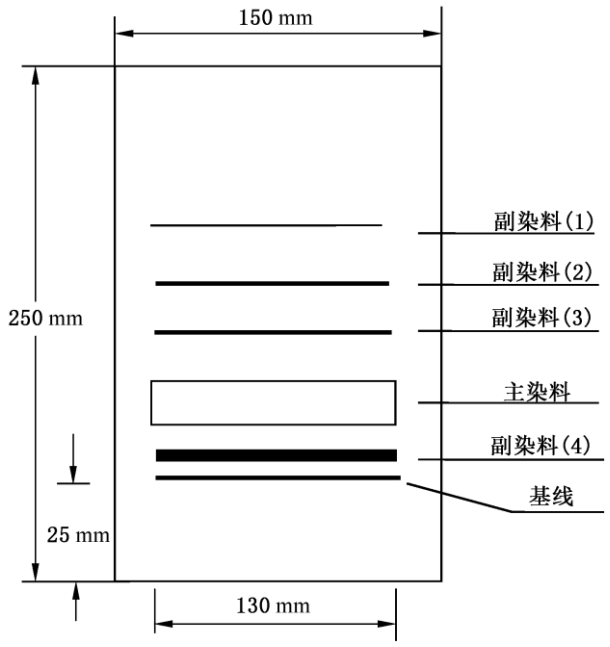

(Figure A.2: Schematic diagram of paper chromatography for subsidiary dyes showing Subsidiary dye (1), (2), (3), Main dye, Subsidiary dye (4), and baseline)

Cut out each subsidiary dye obtained after development and the corresponding parts of the filter paper on the blank filter paper of the same size, and cut them into fine strips of about 5 mm × 15 mm. Place them into 50 mL Nessler colorimetric tubes respectively, accurately add 5 mL of acetone solution, shake for 3 min ~ 5 min, then accurately add 20 mL of sodium bicarbonate solution, shake thoroughly, and then naturally filter through glass sintered-disc funnels (G) respectively. The filtrate should be clear and free of suspended matter. Obtain the eluates of each subsidiary dye and the blank respectively. Measure the respective absorbances of the eluates of each subsidiary dye on a spectrophotometer at their respective maximum absorption wavelengths using 50 mm colorimetric cells. When measuring absorbance on the spectrophotometer, use a mixture of 5 mL of acetone solution and 20 mL of sodium bicarbonate solution as the reference liquid.

A.7.4.4 Preparation of Standard Solution

Pipette 2 mL of the 1% sample solution into a 100 mL volumetric flask, dilute to the mark, and mix well. This solution serves as the standard solution.

A.7.4.5 Preparation of Standard Eluate

Use a micro-injector to draw 100 μL of standard solution, spot it evenly on a baseline 25 mm away from the bottom edge of the filter paper, and blow dry with a hair dryer. Place the filter paper into a chromatographic tank containing the pre-prepared developing solvent. When the developing solvent front rises 40 mm, take it out, blow dry with cold air, cut off all developed dye parts, and operate according to the method in A.7.4.3 to obtain the standard eluate. Measure the absorbance at the maximum absorption wavelength using a 10 mm colorimetric cell. Simultaneously develop a blank filter paper under the same conditions, operate according to the same method, and measure the absorbance of the blank eluate.

A.7.4.6 Calculation of Results

The mass fraction of subsidiary dyes is calculated according to formula (A.8):

$$w_7 = \frac{\sum(A_n - b_n)}{5} \times \frac{5}{A - b} \times \frac{100}{2} \times w_1 \times 100\%$$

Where:

- A_n — Absorbance of each subsidiary dye eluate measured at an optical path length of 50 mm;
- b_n — Absorbance of the corresponding blank reference eluate for each subsidiary dye measured at an optical path length of 50 mm;
- 5 — Multiple conversion to a 10 mm optical path length;
- A — Absorbance of the standard eluate measured at a 10 mm optical path length;
- b — Absorbance of the standard reference blank eluate measured at a 10 mm optical path length;
- 100 — Multiple conversion of the standard eluate into a 1% sample solution;
- 2 — Dilution multiple;
- w_1 — Mass fraction of the sample, %.

The calculation result is expressed to 1 decimal place. The test result is based on the arithmetic means of parallel determination results (retain to 1 decimal place). The absolute difference between two independent determination results obtained under repeatability conditions shall not exceed 0.2% of the arithmetic mean.

A.8 Determination of Sodium 6-Hydroxy-2-Naphthalenesulfonate

A.8.1 Summary of Method

Reversed-phase high-performance liquid chromatography (RP-HPLC) is used, with external standard method based on peak area for quantification, to calculate the mass fraction of sodium 6-hydroxy-2-naphthalenesulfonate.

A.8.2 Reagents and Materials

- **A.8.2.1** Methanol.
- **A.8.2.2** Ammonium acetate solution: 7.8 g/L.
- **A.8.2.3** Sodium 6-hydroxy-2-naphthalenesulfonate.

A.8.3 Instruments and Equipment

- **A.8.3.1** High-performance liquid chromatograph: Infusion pump — flow rate range 0.1 mL/min ~ 5.0 mL/min, within which flow rate stability is $\pm 1\%$; Detector — multi-wavelength ultraviolet spectrophotometric detector or UV detector with equivalent performance.
- **A.8.3.2** Chromatographic column: Stainless steel column, length 150 mm, inner diameter 4.6 mm, stationary phase C_{18}, particle size 5 μm.
- **A.8.3.3** Chromatographic workstation or integrator.
- **A.8.3.4** Ultrasonic generator.
- **A.8.3.5** Sample loop: 20 μL.
- **A.8.3.6** Micro-syringe: 20 μL ~ 100 μL.

A.8.4 Chromatographic Analysis Conditions

- **A.8.4.1** Detection wavelength: 290 nm.
- **A.8.4.2** Column temperature: 40°C.
- **A.8.4.3** Mobile phase: A: Ammonium acetate solution; B: Methanol. Linear concentration gradient: 50 min linear concentration gradient from A: B = 100: 0 (volume ratio) to A: B = 0: 100 (volume ratio).
- **A.8.4.4** Flow rate: 1 mL/min.
- **A.8.4.5** Injection volume: 20 μL. Optimal analysis conditions can be selected according to different instruments. The mobile phase should be mixed well and degassed using an ultrasonic generator.

A.8.5 Preparation of Sample Solution

Weigh about 0.01 g of sample (accurate to 0.0001 g), dissolve with ammonium acetate solution, and dilute to 100 mL.

A.8.6 Preparation of Standard Solution

Weigh about 0.01 g (accurate to 0.0001 g) of sodium 6-hydroxy-2-naphthalenesulfonate previously dried in a vacuum desiccator for 24 h. Dissolve with ammonium acetate solution and bring to volume in a 100 mL volumetric flask. Then pipette 10.0 mL, 5.0 mL, 2.0 mL, and

1.0 mL of the above standard solution respectively, bring to volume with ammonium acetate solution to 100 mL to prepare a series of standard solutions.

A.8.7 Analytical Procedure

Under the chromatographic analysis conditions specified in A.8.4, use a micro-syringe to draw the sample solution and series of standard solutions respectively, inject and fill the sample loop for chromatographic detection. After the last component has eluted, process the results. Measure the peak area of sodium 6-hydroxy-2-naphthalenesulfonate in the series of standard solutions to construct a standard curve. Measure the peak area of sodium 6-hydroxy-2-naphthalenesulfonate in the sample solution and calculate its mass fraction based on the standard curve. The chromatogram is shown in Appendix D.

A.9 Determination of 4-Amino-5-Methoxy-2-Methylbenzenesulfonic Acid

A.9.1 Summary of Method

Reversed-phase high-performance liquid chromatography (RP-HPLC) is used, with external standard method based on peak area for quantification, to calculate the mass fraction of 4-amino-5-methoxy-2-methylbenzenesulfonic acid.

A.9.2 Reagents and Materials

- **A.9.2.1** 4-Amino-5-methoxy-2-methylbenzenesulfonic acid.
- **A.9.2.2** Others are the same as A.8.2.

A.9.3 Instruments and Equipment

Same as in A.8.3.

A.9.4 Chromatographic Analysis Conditions

Same as in A.8.4.

A.9.5 Preparation of Sample Solution

Same as in A.8.5.

A.9.6 Preparation of Standard Solution

Weigh about 0.01 g (accurate to 0.0001 g) of 4-amino-5-methoxy-2-methylbenzenesulfonic acid previously dried in a vacuum desiccator for 24 h. Dissolve with ammonium acetate solution and bring to volume to 100 mL. Then pipette 10.0 mL, 5.0 mL, 2.0 mL, and 1.0 mL of the above standard solution respectively, bring to volume to 100 mL with ammonium acetate solution to prepare a series of standard solutions.

A.9.7 Analytical Procedure

Under the chromatographic conditions specified in A.9.4, inject sample and standard solutions into the chromatograph, measure peak areas, construct a standard curve, and calculate the mass fraction. Chromatogram see Appendix D.

A.10 Determination of Disodium 6,6'-Oxybis(2-Naphthalenesulfonate)

A.10.1 Summary of Method

Reversed-phase high-performance liquid chromatography (RP-HPLC) is used, with external standard method based on peak area for quantification, to calculate the mass fraction of disodium 6,6'-oxybis(2-naphthalenesulfonate).

A.10.2 Reagents and Materials

- **A.10.2.1** Disodium 6,6'-oxybis(2-naphthalenesulfonate).
- **A.10.2.2** Others are the same as in A.8.2.

A.10.3 Instruments and Equipment

Same as in A.8.3.

A.10.4 Chromatographic Analysis Conditions

Same as in A.8.4.

A.10.5 Preparation of Sample Solution

Same as in A.8.5.

A.10.6 Preparation of Standard Solution

Weigh about 0.01 g (accurate to 0.0001 g) of disodium 6,6'-oxybis(2-naphthalenesulfonate) previously dried in a vacuum desiccator for 24 h. Dissolve with ammonium acetate solution and bring to volume to 100 mL. Then pipette 10.0 mL, 5.0 mL, 2.0 mL, and 1.0 mL of the above standard solution respectively, bring to volume to 100 mL with ammonium acetate solution to prepare a series of standard solutions.

A.10.7 Analytical Procedure

Under chromatographic conditions specified in A.10.4, process similar to determine peak areas and calculating mass fraction. Chromatogram see Appendix D.

A.11 Determination of Unsulfonated Aromatic Primary Amines (calculated as Aniline)

A.11.1 Summary of Method

Unsulfonated aromatic primary amines in the sample are extracted with ethyl acetate. The extract and aniline standard solution undergo diazotization and coupling respectively, and the absorbances of their generated dyes are measured and compared for determination.

A.11.2 Reagents and Materials

- **A.11.2.1** Ethyl acetate.
- **A.11.2.2** Hydrochloric acid solution: 1 + 10.
- **A.11.2.3** Hydrochloric acid solution: 1 + 3.
- **A.11.2.4** Potassium bromide solution: 500 g/L.
- **A.11.2.5** Sodium carbonate solution: 200 g/L.
- **A.11.2.6** Sodium hydroxide solution: 40 g/L.
- **A.11.2.7** Sodium hydroxide solution: 4 g/L.
- **A.11.2.8** R salt solution: 20 g/L.
- **A.11.2.9** Sodium nitrite solution: 3.52 g/L.
- **A.11.2.10** Aniline standard solution: Weigh 0.5000 g of freshly distilled aniline in a small beaker, transfer to a 500 mL volumetric flask, wash the beaker 3 times with 150 mL of hydrochloric acid solution (1 + 3), combine into the 500 mL volumetric flask, and dilute to the mark with water. Pipette 25 mL of this solution into a 250 mL volumetric flask and bring to volume with water. The aniline concentration of this solution is 0.1000 g/L.

A.11.3 Instruments and Equipment

- **A.11.3.1** Visible spectrophotometer.
- **A.11.3.2** Colorimetric cell: 40 mm.

A.11.4 Preparation of Sample Solution

Weigh about 2 g of sample (accurate to 0.001 g) into a 150 mL beaker, add 100 mL of water and 5 mL of sodium hydroxide solution (40 g/L), and stir in a warm water bath until completely dissolved. Transfer this solution to a separatory funnel and wash the beaker with a small amount of water. Extract twice with 50 mL of ethyl acetate each time and combine the extracts. Wash the ethyl acetate extract with 10 mL of sodium hydroxide solution (4 g/L) to remove trace pigments. Then back-extract the ethyl acetate solution 3 times with 10 mL of hydrochloric acid solution (1 + 3) each time. Combine the hydrochloric acid extracts, dilute to 100 mL with water, and mix well. This solution serves as the sample solution.

A.11.5 Preparation of Standard Reference Solution

Pipette 2.0 mL of aniline standard solution into a 100 mL volumetric flask, dilute to the mark with hydrochloric acid solution (1 + 10), and mix well. This solution serves as the standard reference solution.

A.11.6 Preparation of Diazotization-Coupling Solution

Pipette 10 mL of the sample solution into a transparent clean test tube, immerse in a beaker containing an ice-water mixture to cool for 10 min. Add 1 mL of potassium bromide solution and 0.5 mL of sodium nitrite solution to the test tube, shake vigorously, and keep cooling in the ice-water mixture for 10 min for the diazotization reaction. Take another 25 mL volumetric flask, add 1 mL of R salt solution and 10 mL of sodium carbonate solution. Add the aniline diazonium salt solution from the test tube into the volumetric flask containing the R salt solution, shake slightly while adding, rinse the test tube with a little water into the volumetric flask, and bring to volume with water. Mix thoroughly and let stand in the dark for 15 min. This solution is the sample diazotization-coupling solution. For the preparation of the standard diazotization-coupling solution, pipette 10 mL of the standard reference solution, and follow the same steps above.

A.11.7 Preparation of Blank Solution

Pipette 10 mL of hydrochloric acid solution (1 + 10), 10 mL of sodium carbonate solution, and 1 mL of R salt solution into a 25 mL volumetric flask and bring to volume with water. This solution serves as a blank solution.

A.11.8 Analytical Procedure

Place the standard diazotization-coupling solution and sample diazotization-coupling solution into colorimetric cells respectively, measure their respective absorbances A_s and A_x at a wavelength of 510 nm using a spectrophotometer, with the blank solution as the reference solution.

A.11.9 Result Determination

$$A_x \leq A_s$$

This means it is not greater than 0.01%. Where:

- A_s — Numerical value of the absorbance of the standard diazotization-coupling solution;
- A_x — Numerical value of the absorbance of the sample diazotization-coupling solution.

Appendix B

Preparation Method of Titanium Trichloride Standard Titration Solution

B.1 Reagents and Materials

- **B.1.1** Hydrochloric acid.
- **B.1.2** Ferrous ammonium sulfate.
- **B.1.3** Ammonium thiocyanate solution: 200 g/L.

- **B.1.4** Sulfuric acid solution: $1 + 1$.
- **B.1.5** Iron(III) chloride solution.
- **B.1.6** Potassium dichromate standard titration solution: $c\left(\frac{1}{6}\mathrm{K_2Cr_2O_7}\right) = 0.1$ mol/L.

B.2 Instruments and Equipment

The titration apparatus diagram is shown in Figure A.1.

B.3 Preparation of Titanium Trichloride Standard Titration Solution

B.3.1 Preparation

Take an appropriate amount of iron(III) chloride solution and 75 mL of hydrochloric acid, place in a 1000 mL brown volumetric flask, dilute to the mark with water freshly boiled and cooled to room temperature, mix well, immediately pour into a lower-outlet bottle protected from light, and store under carbon dioxide gas protection.

B.3.2 Standardization

Weigh about 3 g (accurate to 0.0001 g) of ferrous ammonium sulfate, place in a 500 mL Erlenmeyer flask. Under the protection of a carbon dioxide gas stream, add 50 mL of freshly boiled and cooled water to dissolve it, then add 25 mL of sulfuric acid solution. Continue passing a carbon dioxide gas stream below the liquid surface for protection, quickly and accurately add 35 mL of potassium dichromate standard titration solution. Then titrate with the titanium trichloride standard solution to be standardized until close to the calculated endpoint, immediately add 25 mL of ammonium thiocyanate solution, and continue titrating with the titanium trichloride standard solution until the color changes from red to green, which is the endpoint. The entire titration process should be operated under the protection of a carbon dioxide gas stream, and a blank test should be conducted simultaneously.

B.3.3 Calculation of Results

The concentration of the titanium trichloride standard solution, expressed in moles per liter (mol/L), is calculated according to formula (B.1):

$$c(\mathrm{TiCl_3}) = \frac{V \times c}{V_1 - V_2}$$

Where:

- V — Volume of potassium dichromate standard titration solution, in milliliters (mL);
- c — Concentration of the potassium dichromate standard titration solution, in moles per liter (mol/L);
- V_1 — Volume of titanium trichloride standard titration solution consumed to titrate the high titanium oxidized by potassium dichromate standard titration solution, in milliliters (mL);

- V_2 — Volume of titanium trichloride standard titration solution consumed in the blank titration, in milliliters (mL).

The calculation result is expressed to 4 decimal places. The above standardization must be performed immediately at the time of sample analysis.

Appendix C

Preparation Method of Barium Chloride Standard Solution

C.1 Reagents and Materials

- **C.1.1** Barium chloride.
- **C.1.2** Aqueous ammonia.
- **C.1.3** Sulfuric acid standard titration solution: $c\left(\frac{1}{2}\mathrm{H_2SO_4}\right) = 0.1$ mol/L.
- **C.1.4** Sodium rhodizonate indicator solution (weigh 0.1 g of sodium rhodizonate, dissolve in 10 mL of water, prepare freshly before use).
- **C.1.5** Broad-range pH test paper.

C.2 Preparation

Weigh 12.25 g of barium chloride, dissolve in 500 mL of water, transfer to a 1000 mL volumetric flask, dilute to the mark, and mix well.

C.3 Standardization Method

Pipette 20 mL of sulfuric acid standard titration solution into a 250 mL Erlenmeyer flask, add 50 mL of water, and neutralize with aqueous ammonia until the broad-range pH test paper indicates 8. Then titrate with the barium chloride standard solution, using sodium rhodizonate indicator solution as an external indicator. The endpoint is reached when the reaction liquid and indicator intersect on the filter paper to form a rose-red spot that remains unfaded for 2 min.

C.4 Calculation of Results

The concentration of the barium chloride standard titration solution, expressed in moles per liter (mol/L), is calculated according to formula (C.1):

$$c\left(\frac{1}{2}\mathrm{BaCl_2}\right) = \frac{V \times c}{V_1}$$

Where:

- V — Volume of the sulfuric acid standard titration solution, in milliliters (mL);
- c — Concentration of the sulfuric acid standard titration solution, in moles per liter (mol/L);

- V_1 — Volume of barium chloride standard titration solution consumed, in milliliters (mL).

The calculation result is expressed to 4 decimal places.

Appendix D

Liquid Chromatogram Diagram and Retention Times of Various Components of Allura Red

D.1 Liquid Chromatogram Diagram of Allura Red

The liquid chromatogram diagram of Allura Red is shown in Figure D.1.

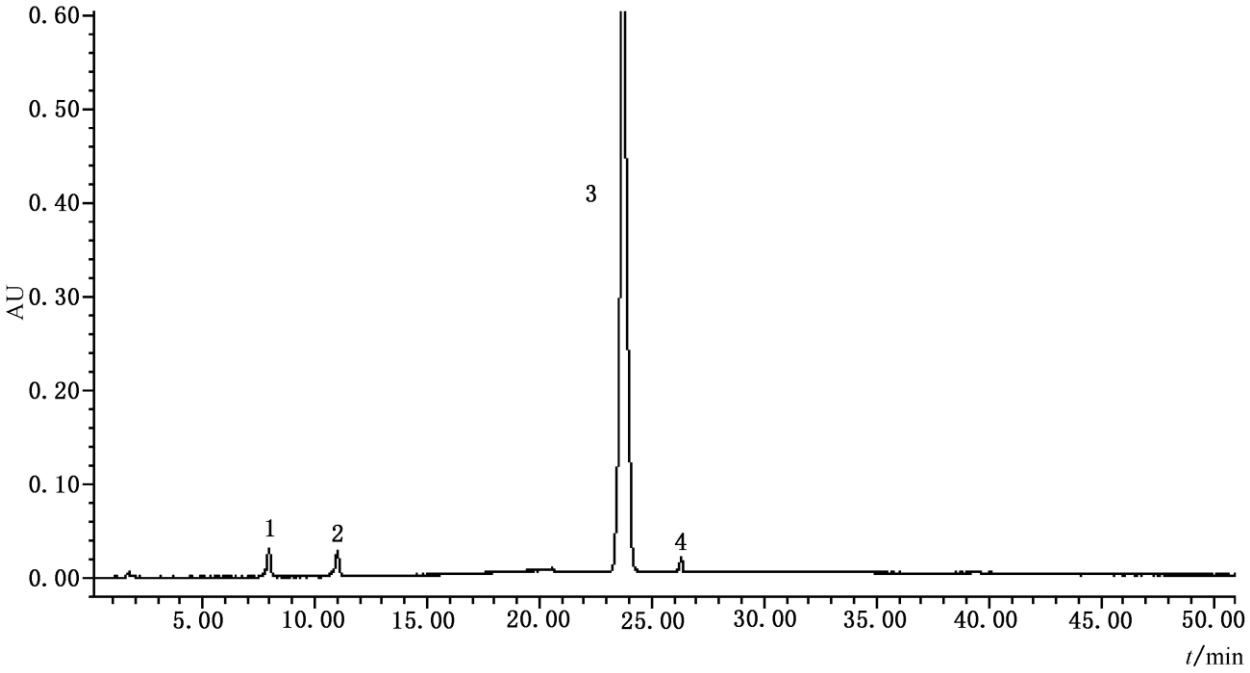

Description: Liquid chromatogram diagram of Allura Red showing peaks 1: 4-Amino-5-methoxy-2-methylbenzenesulfonic acid; 2: Sodium 6-hydroxy-2-naphthalenesulfonate; 3: Allura Red; 4: Disodium 6,6'-oxybis(2-naphthalenesulfonate)

D.2 Retention Times of Various Components of Allura Red

The retention times of various components of Allura Red are shown in Table D.1.

Table D.1 Retention Times of Various Components of Allura Red

Peak Number	**Component Name**	**Retention Time / min\text{min}**

Peak Number	Component Name	Retention Time / min\text{min}min
1	4-Amino-5-methoxy-2-methylbenzenesulfonic acid	10.87
2	Sodium 6-hydroxy-2-naphthalenesulfonate	14.21
3	Allura Red	18.03
4	Disodium 6,6'-oxybis(2-naphthalenesulfonate)	18.70

Note: The retention times of each component may vary with different instruments, different separation columns, and even different injection times, but the elution order of each component remains unchanged.

END UNOFFICIAL TRANSLATION

6. Amendment to GB 1886.234—2016 National Food Safety Standard - Food Additive: Xylitol

Amendment item

Add the following “note” to Table 2 under “3.2 Physicochemical Indicators”
"Note: Commercialized xylitol products shall use xylitol complying with this standard as the raw material, and may add silicon dioxide, a food additive complying with national food safety standards. Except for residue on ignition, all other indicators of commercialized products shall comply with the provisions of this standard."

BEGIN UNOFFICIAL TRANSLATION

GB 1886.234-2016 National Food Safety Standard Food Additive: Xylitol

Issued on August 31, 2016

Implemented on January 1, 2017

Published by the National Health and Family Planning Commission of the People's Republic of China

Preface

This standard replaces GB 13509-2005 Food Additive Xylitol.

Compared with GB 13509-2005, the main changes in this standard are as follows:

- The standard name is revised to "National Food Safety Standard - Food Additive Xylitol".
- The scope is modified.
- The identification test is modified.
- The test methods for xylitol content and other polyols are modified.
- The indicators for residue on ignition, other polyols, and nickel are modified.
- The melting point and heavy metal indicators in the physicochemical indicators are deleted.
- The test method for reducing sugars (calculated as glucose) is modified.

1 Scope

This standard applies to the food additive xylitol produced by using corncobs, bagasse, wood, and other materials as raw materials to produce xylose through hydrolysis and purification, followed by hydrogenation and other processes, or produced directly using xylose as raw material through hydrogenation and other processes.

2 Molecular Formula, Structural Formula, and Relative Molecular Mass

2.1 Molecular Formula

$$C_5H_{12}O_5$$

2.2 Structural Formula

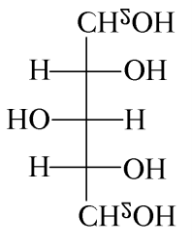

2.3 Relative Molecular Mass

152.15 (according to the 2013 international relative atomic masses)

3 Technical Requirements

3.1 Sensory Requirements

Sensory requirements shall comply with the specifications in Table 1.

Table 1 Sensory Requirements

Item	Requirement	Test Method
Color	White	Place an appropriate amount of sample in a clean, dry white porcelain dish, and observe its color and state under natural light.
State	Crystals or crystalline powder	

3.2 Physicochemical Indicators

Physicochemical indicators shall comply with the specifications in Table 2.

Table 2 Physicochemical Indicators

Item	Index	Test Method
Xylitol content (calculated on dry basis), $w/\%$	98.5 ~ 101.0	Appendix A, A.3

Item	Index	Test Method
Loss on drying, w/%	≤ 0.50	GB 5009.3 Vacuum drying method
Residue on ignition, w/%	≤ 0.10	Appendix A, A.4
Reducing sugars (calculated as glucose), w/%	≤ 0.20	Appendix A, A.5
Other polyols, %	≤ 1.0	Appendix A, A.3
Nickel (Ni), / (mg/kg)	≤ 1.0	GB 5009.138
Lead (Pb), / (mg/kg)	≤ 1.0	GB 5009.12
Total arsenic (calculated as As), / (mg/kg)	≤ 3.0	GB 5009.11

(Note: Sample mass is about 1g).

Appendix A

Test Methods

A.1 General Provisions

Unless otherwise specified, the reagents and water used in this standard refer to analytical purity reagents and grade 3 water specified in GB/T 6682. Standard titration solutions, standard solutions for impurity determination, preparations, and products used in the tests shall be prepared in accordance with GB/T 601, GB/T 602, and GB/T 603, unless otherwise specified. Aqueous solutions are meant when the solvent used to prepare a solution is not specified in this test.

A.2 Identification Test

A.2.1 Solubility

Very soluble in water, slightly soluble in ethanol.

A.2.2 Melting Point

Measured according to the instrumental method in 4.2 of GB/T 617—2006. The melting point range is 92.0°C ~ 96.0°C.

A.2.3 Infrared Absorption Spectroscopy

Compare the spectrum of the sample dispersed in potassium bromide with the xylitol reference standard spectrum (see Figure B.1); the two shall be basically identical.

A.3 Determination of Xylitol Content and Other Polyols

A.3.1 Gas Chromatography (GC)

A.3.1.1 Summary of Method

After acetylation, the sample is determined by gas chromatography (equipped with a hydrogen flame ionization detector), compared with the reference standard, identified by retention time, and quantified by the internal standard method.

A.3.1.2 Reagents and Materials

- **A.3.1.2.1** Absolute ethanol.
- **A.3.1.2.2** Pyridine.
- **A.3.1.2.3** Acetic anhydride.
- **A.3.1.2.4** Xylitol reference standard.
- **A.3.1.2.5** Mannitol reference standard.
- **A.3.1.2.6** Galactitol reference standard.
- **A.3.1.2.7** L-arabinitol reference standard.
- **A.3.1.2.8** Sorbitol reference standard.
- **A.3.1.2.9** Erythritol reference standard (internal standard).

A.3.1.3 Instruments and Equipment

- **A.3.1.3.1** Gas chromatograph, equipped with a hydrogen flame ionization detector.
- **A.3.1.3.2** Balance.

- **A.3.1.3.3** Water bath.
- **A.3.1.3.4** Drying oven.

A.3.1.4 Reference Chromatographic Conditions

- **A.3.1.4.1** Chromatographic column: (14%-cyanopropylphenyl)-dimethylpolysiloxane capillary column, 30 m × 0.25 mm × 0.25 μm, or equivalent chromatographic column.
- **A.3.1.4.2** Temperature programming: Initial temperature 170°C, maintained for 10 min; heated at a rate of 1°C/minto 180°C, maintained for 10 min; then heated at a rate of 30°C/minto 240°C, maintained for 5 min.
- **A.3.1.4.3** Inlet temperature: 240°C.
- **A.3.1.4.4** Detector temperature: 250°C.
- **A.3.1.4.5** Carrier gas: Nitrogen.
- **A.3.1.4.6** Carrier gas flow rate: 2.0 mL/min.
- **A.3.1.4.7** Hydrogen: 50 mL/min.
- **A.3.1.4.8** Air: 50 mL/min.
- **A.3.1.4.9** Split ratio: 1: 100.
- **A.3.1.4.10** Injection volume: 1.0 μL.

A.3.1.5 Analytical Procedure

- **A.3.1.5.1 Preparation of Internal Standard Solution**

  Weigh 500 mgof erythritol reference standard (internal standard), accurate to 0.0001 g, dissolve in water, transfer to a 25 mLvolumetric flask, dilute to the mark, and mix well.
- **A.3.1.5.2 Preparation of Standard Solution**

  Weigh 25 mgof mannitol, galactitol, L-arabinitol, and sorbitol each, and 4.9 gof xylitol reference standard, accurate to 0.0001 g, dissolve with water, transfer to separate 100 mLvolumetric flasks, dilute to the mark, and mix well. Pipette 1 mLof the resulting solution into a 100 mLround-bottom flask, add 1.0 mLof internal standard solution, rotary evaporate to dryness in a 60°Cwater bath, then add 1 mLof absolute ethanol, shake to dissolve, and rotary evaporate to dryness in a 60°Cwater bath. Add 1 mLof pyridine to dissolve the residue, add 1 mLof acetic anhydride, close the cap tightly, vortex mix for 30 s, place in a 70°Cdrying oven for 30 min, take out, and let cool.
- **A.3.1.5.3 Preparation of Sample Solution**

  Take about 5g of the sample, weigh accurately, weigh, accurate to 0.0001 g, dissolve with water, transfer to a 100 mLvolumetric flask, dilute to the mark, and mix well.

Pipette 1 mLof the resulting solution into a 100 mLround-bottom flask, add 1.0 mLof internal standard solution, rotary evaporate to dryness in a 60°Cwater bath, then add 1 mLof absolute ethanol, shake to dissolve, and rotary evaporate to dryness in a 60°Cwater bath. Add 1 mLof pyridine to dissolve the residue, add 1 mLof acetic anhydride, close the cap tightly, vortex mix for 30 s, place in a 70°Cdrying oven for 30 min, take out, and let cool.

- **A.3.1.5.4 Determination**

  Under the reference chromatographic conditions, inject the standard solution and sample solution for determination. The reference retention times and chromatograms of each component are shown in Figure B.2.

A.3.1.6 Calculation of Results

The mass fraction of xylitol or other polyol content is calculated according to formula (A.1). Other polyols are the sum of the contents of L-arabinitol, galactitol, mannitol, and sorbitol.

$$w_i = \frac{m_s \times R_u}{m_u \times R_s} \times 100\%$$

Where:

- m_s— Mass of xylitol or other polyols in the standard solution, in milligrams (mg);
- m_u— Mass of the sample after loss on drying, in milligrams (mg);
- R_u— Ratio of the response value of xylitol or other polyols to the erythritol derivative in the sample;
- R_s— Ratio of the response value of xylitol or other polyols to the erythritol derivative in the standard solution.

The test result is based on the arithmetic means of parallel determination results. Under repeatability conditions, the absolute difference between two independent determination results for xylitol shall not exceed 2%of the arithmetic mean, and the absolute difference between two independent determination results for other polyols shall not exceed 0.1%.

A.3.2 High-Performance Liquid Chromatography (HPLC)

A.3.2.1 Summary of Method

The sample is dissolved in water, detected by liquid chromatography, and quantified by the external standard method.

A.3.2.2 Reagents and Materials

- **A.3.2.2.1** Water: Grade 1 water.
- **A.3.2.2.2** Acetonitrile: Chromatographically pure.
- **A.3.2.2.3** Xylitol reference standard.
- **A.3.2.2.4** L-arabinitol reference standard.
- **A.3.2.2.5** Sorbitol reference standard.
- **A.3.2.2.6** Galactitol reference standard.
- **A.3.2.2.7** Mannitol reference standard.

A.3.2.3 Instruments and Equipment

High-performance liquid chromatograph, equipped with a refractive index detector.

A.3.2.4 Reference Chromatographic Conditions

- **A.3.2.4.1** Chromatographic column: Analytical column packed with polystyrene-divinylbenzene resin, 300 mm × 7.8 mm, or equivalent chromatographic column.
- **A.3.2.4.2** Mobile phase: Acetonitrile - water (35 + 65).
- **A.3.2.4.3** Flow rate: 0.6 mL/min.
- **A.3.2.4.4** Column temperature: 75°C.
- **A.3.2.4.5** Detector cell temperature: 45°C.
- **A.3.2.4.6** Injection volume: 20 μL.

A.3.2.5 Analytical Procedure

- **A.3.2.5.1 Preparation of Standard Solution**

  Accurately weigh 0.1 geach of mannitol reference standard, L-arabinitol reference standard, sorbitol reference standard, and galactitol reference standard, and 2.5g of xylitol reference standard, accurate to 0.0001g, and bring to volume with water in a 100 mLvolumetric flask. Then pipette 2.0 mL, 4.0 mL, 6.0 mL, and 8.0 mLof this standard solution into 10 mLvolumetric flasks respectively, bring to volume with water, to prepare a series of mixed standard solutions containing 5.0 mg/mL, 10.0 mg/mL, 15.0 mg/mL, 20.0 mg/mL, and 25.0 mg/mLof xylitol, and 0.2 mg/mL, 0.4 mg/mL, 0.6 mg/mL, 0.8 mg/mL, and 1.0 mg/mLof mannitol, L-arabinitol, sorbitol, and galactitol.
- **A.3.2.5.2 Preparation of Sample Solution**

Take about 2 gof the sample after loss on drying, accurately weigh, accurate to 0.0001 g, and bring to volume with water in a 100 mL volumetric flask.

- **A.3.2.5.3 Determination**

  Under reference chromatographic conditions, inject the series of standard solutions and sample solutions respectively for determination, and use the series of standard solutions to generate a calibration table according to the external standard method. The reference retention times and chromatograms of each component are shown in Figure B.3.

A.3.2.6 Calculation of Result

The mass fraction of xylitol or other polyol content is calculated according to formula (A.2). Other polyols are the sum of the contents of L-arabinitol, galactitol, mannitol, and sorbitol.

$$w_i = \frac{m_s \times A_u}{m \times A_s} \times 100\%$$

Where:

- m_s— Mass of a certain component in the standard solution, in grams (g);
- A_u— Measured response value of a certain component in the sample;
- m— Mass of the sample after loss on drying, in grams (g);
- A_s— Measured response value of a certain component in the standard solution.

The test result is based on the arithmetic means of parallel determination results. Under repeatability conditions, the absolute difference between two independent determination results for xylitol shall not exceed 2%ofosyl/the arithmetic mean, and the absolute difference between two independent determination results for other polyols shall not exceed 0.1%.

A.4 Determination of Residue on Ignition

A.4.1 Analytical Procedure

Accurately weigh 2 gof the sample, accurate to 0.0001 g, place it in a pre-weighed constant-mass crucible or platinum dish, add about 0.5 mLof sulfuric acid to wet the sample, heat on an electric furnace to carbonize, then transfer to a high-temperature furnace and ignite at 600°C $\pm$ 25°Cto ash completely, and then weigh to constant mass.

A.4.2 Calculation of Results

The mass fraction of residue on ignition is calculated according to formula (A.3):

$$w_2 = \frac{m_1 - m_2}{m} \times 100\%$$

Where:

- m_1— Mass of the crucible plus residue, in grams (g);
- m_2— Mass of the empty crucible, in grams (g);
- m— Mass of the sample, in grams (g).

The test result is based on the arithmetic means of parallel determination results. Under repeatability conditions, the absolute difference between two independent determination results shall not exceed 0.02%.

A.5 Determination of Reducing Sugars (calculated as Glucose)

A.5.1 Summary of Method

The reducing sugars in the sample react with divalent copper ions in Benedict's reagent to generate red cuprous oxide. The cuprous oxide is oxidized by iodine and turns back into divalent copper ions. The excess iodine is titrated with sodium thiosulfate, and the reducing sugar content is calculated using the iodine consumed in the oxidation reaction.

A.5.2 Reagents and Materials

- **A.5.2.1** Hydrochloric acid solution: $c(\mathrm{HCl}) = 1$ mol/L.
- **A.5.2.2** Iodine standard solution: Weigh 7.2 gof potassium iodide and 5.0762 gof iodine to prepare 1000 mLof solution, $c\left(\frac{1}{2}\mathrm{I}_2\right) = 0.04$ mol/L, stored in a brown bottle (shake well after standing for 24 hbefore use).
- **A.5.2.3** Sodium thiosulfate standard titration solution: $c(\mathrm{Na_2S_2O_3}) = 0.04$ mol/L. Accurately measure 400 mLof standardized 0.1 mol/Lsodium thiosulfate standard solution and dilute to 1000 mL.
- **A.5.2.4** Acetic acid solution: Measure 48 mLof glacial acetic acid, dilute to 1000 mL.
- **A.5.2.5** Starch indicator solution: 10 g/L.
- **A.5.2.6** Benedict's reagent:
    - Solution A: Add 16 gof copper sulfate ($\mathrm{CuSO_4 \cdot 5H_2O}$) to 150 mLof water, stir to dissolve;

- Solution B: Add successively 150 gof citric acid, 44.13 gof anhydrous sodium carbonate, and 10 gof sodium bicarbonate to 650 mLof water, heat to dissolve;
- Mix the above two cooled solutions A and B, dilute to 1000 mLwith water, filter, and use after standing for 24 h.

A.5.3 Analytical Procedure

Accurately weigh 5 gof the sample, accurate to 0.001 g, place in a 250 mLErlenmeyer flask, add 20 mLof Benedict's reagent and a few glass beads, heat and control the temperature to boil exactly within 4 min $\pm$ 0.25 min, continue boiling for 3 min, then cool rapidly with tap water. First add 50 mLof water into the Erlenmeyer flask, then add 50 mLof acetic acid solution. Accurately pipette 20 mLof iodine standard solution, add 25 mLof hydrochloric acid solution, shake thoroughly to completely dissolve the red precipitate, back-titrate the excess iodine with sodium thiosulfate standard titration solution. Near the endpoint (changing from brownish black to bluish green), add about 5 drops of starch indicator to indicate the endpoint, and continue titrating until the color turns to bright blue as the endpoint. Conduct a blank test simultaneously.

A.5.4 Calculation of Results

The mass fraction of reducing sugars, w_3, is calculated according to formula (A.4):

$$w_3 = \frac{(V_0 - V_1) \times c \times 0.112}{0.04 \times m}$$

Where:

- V_0— Volume of sodium thiosulfate standard titration solution consumed in the blank test, in milliliters (mL);
- V_1— Volume of sodium thiosulfate standard titration solution consumed by the sample, in milliliters (mL);
- c— Actual concentration of the sodium thiosulfate standard titration solution, in moles per liter (mol/L);
- 0.112— 1 mLof 0.04 mol/L($\frac{1}{2}I_2$) iodine standard solution (calculated as glucose) is equivalent to 0.112 gof glucose;
- 0.04— Concentration of the standard iodine solution, in moles per liter (mol/L);
- m— Mass of the sample, in grams (g).

The test result is based on the arithmetic means of parallel determination results. Under repeatability conditions, the absolute difference between two independent determination results shall not exceed 0.01%.

Appendix B

Infrared Spectrum of Xylitol Reference Standard and Chromatograms for Determination of Xylitol and Other Polyols

B.1 Infrared Spectrum of Xylitol Reference Standard

The infrared spectrum of the xylitol reference standard is shown in Figure B.1.

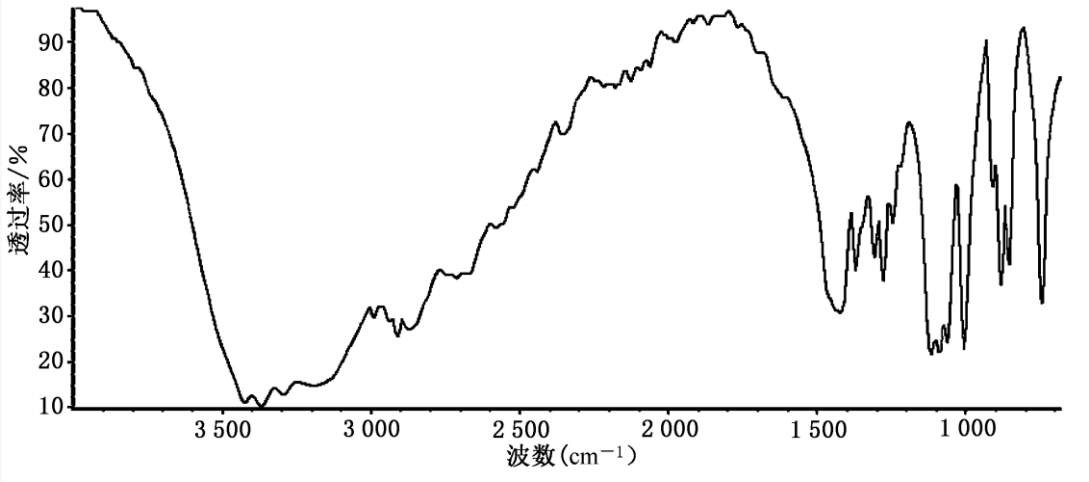

(Description: Infrared spectrum of xylitol showing transmittance percentage versus wavenumber in cm^{-1})

B.2 Gas Chromatogram for Determination of Xylitol and Other Polyols

The gas chromatogram for the determination of xylitol and other polyols is shown in Figure B.2.

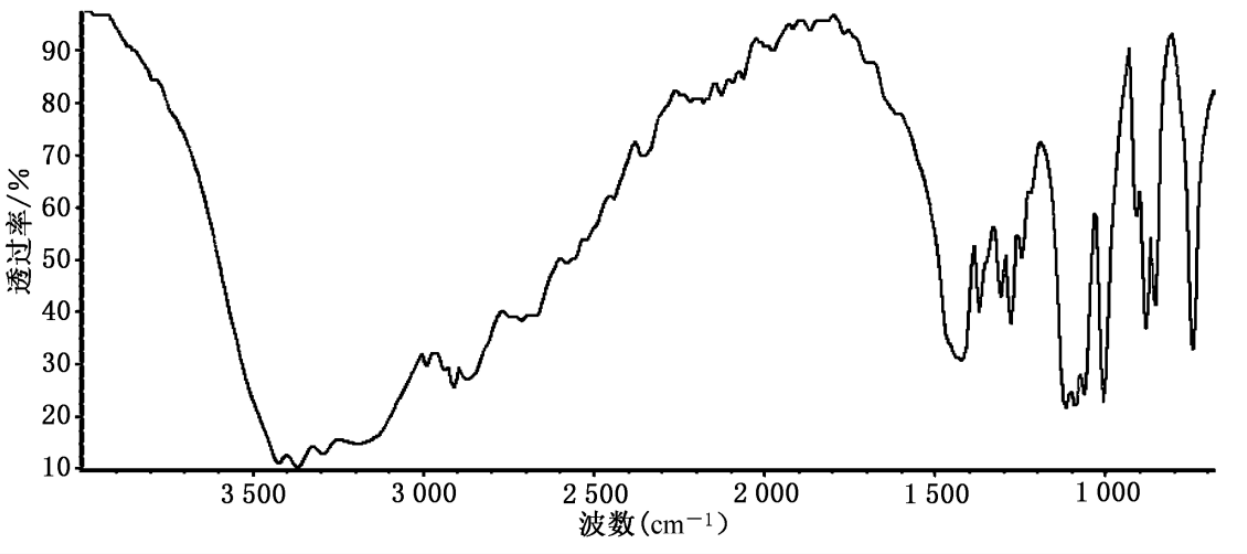

(Description: Gas chromatogram of xylitol and other polyols standard reference showing peaks 1: Erythritol; 2: L-arabinitol; 3: Xylitol; 4: Galactitol; 5: Mannitol; 6: Sorbitol)

Note: Reference retention times of each component: Erythritol 3.6 min, L-arabinitol 10.6 min, xylitol 13.5 min, galactitol 23.7 min, mannitol 25.2 min, sorbitol 26.4 min.

B.3 Liquid Chromatogram for Determination of Xylitol and Other Polyols

The liquid chromatogram for the determination of xylitol and other polyols is shown in Figure B.3.

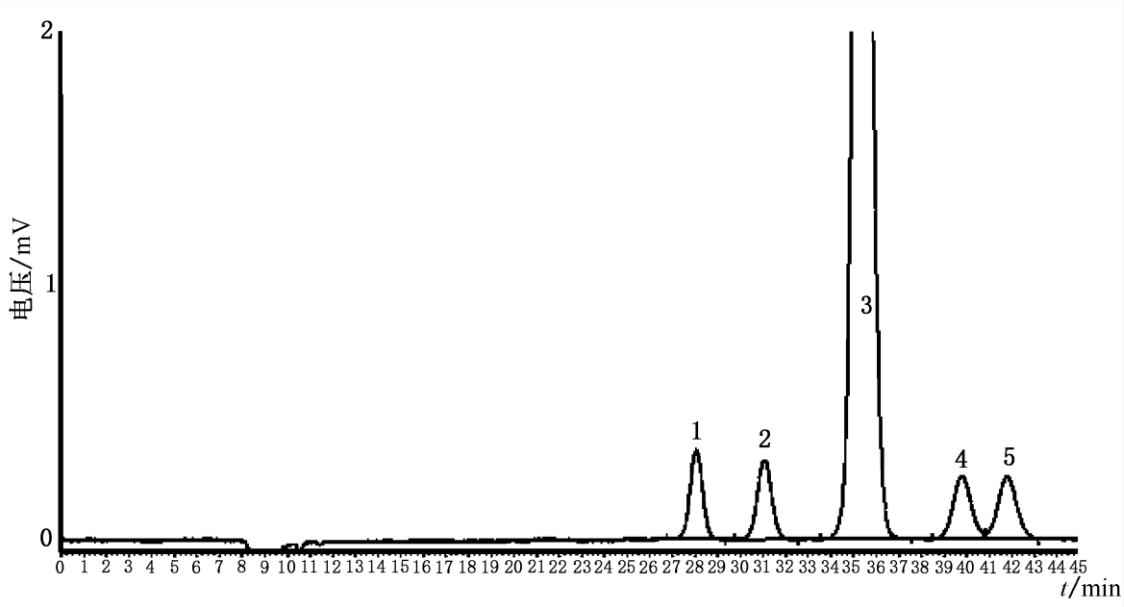

(Description: Liquid chromatogram of xylitol and other polyols standard reference showing peaks 1: L-arabinitol; 2: Mannitol; 3: Xylitol; 4: Galactitol; 5: Sorbitol)

Note: Reference retention times of each component: L-arabinitol 28.0 min, mannitol 31.0 min, xylitol 35.3 min, galactitol 39.8 min, sorbitol 41.7 min.

END UNOFFICIAL TRANSLATION

7. Amendment to GB 4479.1—2010 National Food Safety Standard — Food Additive Amaranth

Amendment

Add the following “note” to Table 2 under “4.2. Physicochemical Requirements”

“Note: Commercial liquid amaranth products shall use amaranth complying with this standard as the raw material. Food raw materials complying with the relevant standards and/or food additives complying with food safety national standards may be added, including benzoic acid and its sodium salts, sorbic acid and its potassium salts, propylene glycol, glycerol, propylene glycol alginate, polysorbates, sorbitol, sorbitol solution, ascorbic acid (vitamin C), tert-butylhydroquinone (TBHQ), vitamin E, as well as thickeners and acidity regulators. The amaranth content and sensory requirements of commercial products shall meet the claims declared. The loss-on-drying and total chloride and sulfate requirements do not apply to commercial liquid products. Except for the foregoing indicators, all other indicators shall comply with this standard.”

BEGIN UNOFFICIAL TRANSLATION

GB 4479.1—2010 National Food Safety Standard Food Additive Amaranth

Preface

This standard replaces GB 4479.1—1999, Food Additive—Amaranth. Compared with GB 4479.1—1999, the main changes are:

-Addition of safety precautions;

-Deletion of the ≥60.0% quality specification;

-Revision of the water-insoluble matter limit from ≤0.30% to ≤0.20%;

-Revision of the identification test;

-Reduction of the allowable difference between parallel results in the spectrophotometric colorimetric method from 2.0% to 1.0%;

-Addition of requirements and test methods for total unreacted intermediates and unsulfonated primary aromatic amines (calculated as aniline);

-Change of the arsenic test from a chemical limit test to atomic absorption; deletion of the heavy metals' specification (calculated as Pb);

-nd addition of a lead requirement and test method.

Appendices A, B and C are normative; Appendix D is informative. Earlier editions: GB 4479.1—1986, GB 4479.1—1996 and GB 4479.1—1999.

1 Scope

This standard applies to the food additive amaranth produced by diazotizing sodium 1-naphthylamine-4-sulfonate and coupling it with sodium 2-naphthol-3,6-disulfonate.

2 Normative references

The documents cited in this standard are indispensable to its application. For dated references, only the cited edition applies. For undated references, the latest edition (including all amendments) applies.

3 Chemical name, structural formula, molecular formula and relative molecular mass

3.1 Chemical name

Trisodium 3-hydroxy-4-(4-azonaphthalene sulfonate)-2,7-naphthalenedisulfonate.

3.2 Structural formula

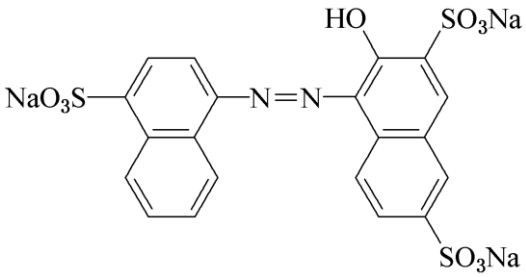

3.3 Molecular formula

$C_{20}H_{11}N_2Na_3O_{10}S_3$

3.4 Relative molecular mass

604.48 (based on the 2007 relative atomic masses).

4 Technical requirements

4.1 Sensory requirements

The product shall meet Table 1.

Item	Requirement	Test method
Color	Reddish brown to dark reddish brown	Visual assessment under natural light
Physical state	Powder or granules	

4.2 Physicochemical requirements

The product shall meet Table 2.

Item	Limit	Test method
Amaranth, w/%	≥ 85.0	Appendix A, A.4
Total of loss on drying, chlorides (as NaCl) and sulfates (as Na_2SO_4), w/%	≤ 15.0	Appendix A, A.5
Water-insoluble matter, w/%	≤ 0.20	Appendix A, A.6
Subsidiary colors, w/%	≤ 3.0	Appendix A, A.7
Total unreacted intermediates, w/%	≤ 0.50	Appendix A, A.8
Unsulfonated primary aromatic amines (as aniline), w/%	≤ 0.01	Appendix A, A.9
Arsenic (As), mg/kg	≤ 1.0	Appendix A, A.10
Lead (Pb), mg/kg	≤ 10.0	Appendix A, A.11

Note added by Amendment No. 1: Commercial liquid amaranth products shall use amaranth complying with this standard as the raw material. Food raw materials complying with the relevant standards and/or food additives complying with food safety national standards may be added, including benzoic acid and its sodium salts, sorbic acid and its potassium salts, propylene glycol, glycerol, propylene glycol alginate, polysorbates, sorbitol, sorbitol solution, ascorbic acid (vitamin C), tert-butylhydroquinone (TBHQ), vitamin E, as well as thickeners and acidity regulators. The amaranth content and sensory requirements of commercial products shall meet the claims declared. The loss-on-drying and total chloride and sulfate requirements do not apply to commercial liquid products. All other requirements shall comply with this standard.

APPENDIX A

(Normative Appendix)

Test Methods

A.1 Safety precautions

Some reagents used in the test methods of this Standard are toxic or corrosive. Handle them carefully in accordance with relevant requirements. If they splash onto the skin, rinse immediately with water; in serious cases, seek medical treatment immediately. Volatile acids shall be handled in a fume hood.

A.2 General provisions

Unless otherwise specified, the reagents and water used in this Standard shall be analytical-reagent grade and Grade 3 water as specified in GB/T 6682—2008, respectively. Unless otherwise specified, standard solutions, impurity standard solutions, preparations and products required for testing shall be prepared and standardized in accordance with GB/T 601, GB/T 602 and GB/T 603.

A.3 Identification tests

A.3.1 Reagents and materials

A.3.1.1 Sulfuric acid.

A.3.1.2 Ammonium acetate solution: 1.5 g/L.

A.3.2 Apparatus and equipment

A.3.2.1 Spectrophotometer.

A.3.2.2 Cuvette: 10 mm.

A.3.3 Identification procedure

The following conditions shall be met:

A.3.3.1 Weigh about 0.1 g of sample (accurate to 0.01 g) and dissolve in 100 mL of water. A clear red solution appears.

A.3.3.2 Weigh about 0.2 g of sample (accurate to 0.01 g) and add 20 mL of sulfuric acid; the solution turns purple. Add 2–3 drops of this solution to 5 mL of water; it turns red.

A.3.3.3 Weigh about 0.1 g of sample (accurate to 0.01 g) and dissolve in 100 mL of ammonium acetate solution. Take 1 mL of this solution and dilute to 100 mL with ammonium acetate solution. The maximum absorption wavelength of the resulting solution is 520 nm ± 2 nm.

A.4 Determination of amaranth

A.4.1 Titanium trichloride titration (referee method)

A.4.1.1 Principle

In an acidic medium, the azo group in amaranth is reduced and decomposed by titanium trichloride. The content is calculated from the volume of standard titanium trichloride titration solution consumed.

A.4.1.2 Reagents and materials

A.4.1.2.1 Trisodium citrate.

A.4.1.2.2 Standard titanium trichloride titration solution: $c(TiCl_3) = 0.1$ mol/L (prepare immediately before use; see Appendix B).

A.4.1.2.3 Carbon dioxide in a cylinder.

A.4.1.3 Apparatus and equipment

The apparatus for the titanium trichloride titration method is shown in Figure A.1.

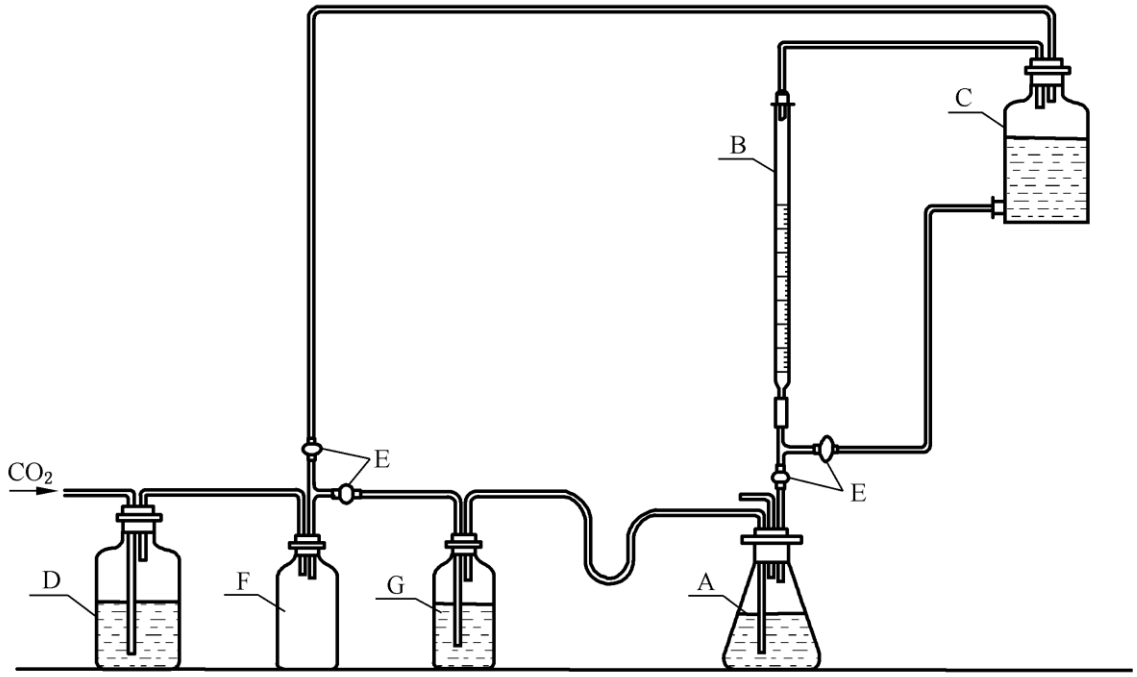

Description

A	Conical flask (500 mL)
B	Brown burette (50 mL)
C	Bottom-outlet glass bottle wrapped in black paper (2 000 mL)
D	Container (5 000 mL) holding equal volumes of 100 g/L ammonium carbonate solution and 100 g/L ferrous sulfate solution
E	Stopcock
F	Empty bottle
G	Gas-washing bottle containing water

A.4.1.4 Procedure

Weigh about 0.5 g of sample (accurate to 0.0001 g) into a 500 mL conical flask and dissolve in 50 mL of water that has been boiled and cooled to room temperature. Add 15 g of

trisodium citrate and 150 mL of boiling water and shake to dissolve. Assemble the apparatus as shown in Figure A.1. While passing carbon dioxide below the liquid surface, heat to boiling and titrate with the standard titanium trichloride solution until the inherent color disappears.

A.4.1.5 Calculation of results

Calculate the mass fraction of amaranth, w_1, expressed as a percentage, using Formula (A.1):

$$w_1 = [c \times (V/1\,000) \times (M/4) / m_1] \times 100\% \quad \ldots\ldots\ldots\ldots\ldots\ldots\ldots\ldots\ldots\ldots \text{(A.1)}$$

where:

c is the exact concentration of the standard titanium trichloride titration solution, in mol/L;

V is the exact volume of standard titanium trichloride titration solution consumed by the sample, in mL;

M is the molar mass of amaranth, in g/mol [$M(C_{20}H_{11}N_2Na_3O_{10}S_3) = 604.48$];

m_1 is the mass of the sample, in g.

Express the result to one decimal place. The absolute difference between parallel determination results shall not exceed 1.0 percentage point (mass fraction); take their arithmetic mean as the result.

A.4.2 Spectrophotometric colorimetry

A.4.2.1 Principle

Dissolve the sample and an amaranth reference standard of known content separately in water, dilute to volume with ammonium acetate solution, measure their absorbances at the maximum absorption wavelength, and calculate the content.

A.4.2.2 Reagents and materials

A.4.2.2.1 Ammonium acetate solution: 1.5 g/L.

A.4.2.2.2 Amaranth reference standard: ≥ 85.0% (mass fraction, determined in accordance with A.4.1).

A.4.2.3 Apparatus and equipment

A.4.2.3.1 Spectrophotometer.

A.4.2.3.2 Cuvette: 10 mm.

A.4.2.4 Preparation of amaranth reference-standard solution

Weigh about 0.5 g of amaranth reference standard (accurate to 0.0001 g), dissolve in a suitable amount of water, transfer to a 1 000 mL volumetric flask, dilute to the mark with water and mix. Transfer 10 mL to a 500 mL volumetric flask, dilute to the mark with ammonium acetate solution and mix. Set aside.

A.4.2.5 Preparation of amaranth sample solution

Use the same weighing and operating procedure as for preparation of the reference-standard solution in A.4.2.4.

A.4.2.6 Procedure

Place the reference-standard solution and sample solution separately in 10 mm cuvettes and measure their absorbances at the maximum absorption wavelength using a spectrophotometer, with ammonium acetate solution as the reference.

A.4.2.7 Calculation of results

Calculate the mass fraction of amaranth, w_1, expressed as a percentage, using Formula (A.2):

$$w_1 = (A \times m_0 \times w_0) / (A_0 \times m) \quad \text{..... (A.2)}$$

where: A is the absorbance of the sample solution; m_0 is the mass of the amaranth reference standard, in g; A_0 is the absorbance of the reference-standard solution; m is the sample mass, in g; and w_0 is the mass fraction of amaranth in the reference standard, %.

Express the result to one decimal place. The absolute difference between parallel results shall not exceed 1.0 percentage point (mass fraction); take their arithmetic mean as the result.

A.5 Determination of total loss on drying, chloride (as NaCl) and sulfate (as Na_2SO_4)

A.5.1 Determination of loss on drying

A.5.1.1 Procedure

Weigh about 2 g of sample (accurate to 0.001 g) into a weighing bottle previously dried to constant mass in an oven at 135 °C ± 2 °C. Dry in the oven at 135 °C ± 2 °C to constant mass.

A.5.1.2 Calculation of results

Calculate the mass fraction of loss on drying, w_2, expressed as a percentage, using Formula (A.3):

$$w_2 = [(m_2 - m_3) / m_2] \times 100\% \quad \text{..... (A.3)}$$

where m_2 is the sample mass before drying, in g, and m_3 is the sample mass after drying to constant mass, in g. Express the result to one decimal place. The absolute difference between parallel results shall not exceed 0.2 percentage point (mass fraction); take their arithmetic mean as the result.

A.5.2 Determination of chloride (as NaCl)

A.5.2.1 Reagents and materials

A.5.2.1.1 Nitrobenzene.

A.5.2.1.2 Activated carbon, 767 needle type.

A.5.2.1.3 Nitric acid solution: 1 + 1.

A.5.2.1.4 Silver nitrate solution: $c(AgNO_3) = 0.1$ mol/L.

A.5.2.1.5 Ferric ammonium sulfate solution: dissolve about 14 g of ferric ammonium sulfate in 100 mL of water, filter, add 10 mL of nitric acid, and store in a brown bottle.

A.5.2.1.6 Ammonium thiocyanate standard titration solution: $c(NH_4CNS) = 0.1$ mol/L.

A.5.2.2 Preparation of sample solution

Weigh about 2 g of sample (accurate to 0.001 g), dissolve in 150 mL of water, add about 15 g of activated carbon, and gently boil for 2–3 min. Add 1 mL of nitric acid solution, shake continuously to mix, and stand for 30 min, shaking occasionally. Filter through dry filter paper. If the filtrate is coloured, add another 5 g of activated carbon, stand for 1 h with occasional shaking, and filter again through dry filter paper. If it remains coloured, replace the activated carbon and repeat until the filtrate is colourless. Wash the carbon three times, each time with 10 mL of water. Combine the filtrates in a 200 mL volumetric flask, dilute to the mark with water and mix. Use this solution to determine chloride and sulfate.

A.5.2.3 Procedure

Transfer 50 mL of sample solution to a 500 mL conical flask. Add 2 mL of nitric acid solution, 10 mL of silver nitrate solution (use more if the chloride content is high), and 5 mL of nitrobenzene. Shake vigorously until the silver chloride coagulates. Add 1 mL of ferric ammonium sulfate solution and titrate the excess silver nitrate with ammonium thiocyanate standard titration solution to the endpoint, maintaining the endpoint for 1 min. Perform a blank test in the same way.

A.5.2.4 Calculation of results

Calculate the mass fraction of chloride (as NaCl), w_3, expressed as a percentage, using Formula (A.4):

$$w_3 = c_1(V_1 - V_0) \times M_1 \times 200 / (m_4 \times 50 \times 1\,000) \times 100\% \quad \text{..... (A.4)}$$

where c_1 is the exact concentration of ammonium thiocyanate standard titration solution, mol/L; V_1 is the exact volume consumed in the blank titration, mL; V_0 is the exact volume consumed in titrating the sample solution, mL; M_1 is the molar mass of sodium chloride, g/mol [M_1(NaCl) = 58.4]; and m_4 is the sample mass, g. Express the result to one decimal place. The absolute difference between parallel results shall not exceed 0.3 percentage point (mass fraction); take their arithmetic mean as the result.

A.5.3 Determination of sulfate (as Na_2SO_4)

A.5.3.1 Reagents and materials

A.5.3.1.1 Sodium hydroxide solution: 2 g/L.

A.5.3.1.2 Hydrochloric acid solution: 1 + 1 999.

A.5.3.1.3 Barium chloride standard titration solution: c(½$BaCl_2$) = 0.1 mol/L (preparation in Appendix C).

A.5.3.1.4 Phenolphthalein indicator solution: 10 g/L.

A.5.3.1.5 Sodium rhodizonate indicator solution: dissolve 0.1 g in 10 mL of water; prepare immediately before use.

A.5.3.2 Procedure

Transfer 25 mL of sample solution (A.5.2.2) to a 250 mL conical flask. Add one drop of phenolphthalein indicator solution and add sodium hydroxide solution dropwise until the

solution turns pink. Then add hydrochloric acid solution dropwise until the pink colour disappears and mix. After dissolution, titrate with barium chloride standard titration solution while shaking continuously, using sodium rhodizonate solution as an external indicator. The endpoint is a rose-red spot at the junction of the reaction solution and indicator on filter paper that does not fade for 2 min. Perform a blank test in the same way.

A.5.3.3 Calculation of results

Calculate the mass fraction of sulfate (as Na_2SO_4), w_4, expressed as a percentage, using Formula (A.5):

$$w_4 = c_2(V_2 - V_3) \times (M_2/2) \times 200 / (m_4 \times 25 \times 1\,000) \times 100\% \quad \text{..... (A.5)}$$

where c_2 is the exact concentration of barium chloride standard titration solution, mol/L; V_2 is the exact volume consumed in titrating the sample solution, mL; V_3 is the exact volume consumed in the blank titration, mL; M_2 is the molar mass of sodium sulfate, g/mol [$M_2(Na_2SO_4) = 142.04$]; and m_4 is the sample mass, g. Express the result to one decimal place. The absolute difference between parallel results shall not exceed 0.2 percentage point (mass fraction); take their arithmetic mean as the result.

A.5.4 Calculation of total loss on drying, chloride (as NaCl) and sulfate (as Na_2SO_4)

Calculate the total mass fraction, w_5, expressed as a percentage, using Formula (A.6):

$$w_5 = w_2 + w_3 + w_4 \quad \text{..... (A.6)}$$

where w_2 is the mass fraction of loss on drying, %; w_3 is the mass fraction of chloride (as NaCl), %; and w_4 is the mass fraction of sulfate (as Na_2SO_4), %. Express the result to one decimal place.

A.6 Determination of water-insoluble matter

A.6.1 Apparatus and equipment

A.6.1.1 Glass sintered crucible: G4, pore size 5 μm–15 μm.

A.6.1.2 Constant-temperature drying oven.

A.6.2 Procedure

Weigh about 3 g of sample (accurate to 0.001 g) into a 500 mL beaker. Add 250 mL of hot water at 50 °C–60 °C and dissolve. Filter through a glass sintered crucible previously dried to constant mass at 135 °C ± 2 °C and wash thoroughly with hot water until the washings are colorless. Dry in an oven at 135 °C ± 2 °C to constant mass.

A.6.3 Calculation of results

Calculate the mass fraction of water-insoluble matter, w_6, expressed as a percentage, using Formula (A.7):

$$w_6 = (m_6 / m_5) \times 100\% \quad \text{..... (A.7)}$$

where m_6 is the mass of water-insoluble matter after drying, g, and m_5 is the sample mass, g. Express the result to two decimal places. The absolute difference between parallel results

shall not exceed 0.05 percentage point (mass fraction); take their arithmetic mean as the result.

A.7 Determination of subsidiary colors

A.7.1 Principle. Separate the components by paper chromatography, delute them, and quantify them by spectrophotometry.

A.7.2 Reagents and materials: A.7.2.1 absolute ethanol; A.7.2.2 n-butanol; A.7.2.3 acetone solution, 1 + 1; A.7.2.4 ammonia solution, 4 + 96; A.7.2.5 sodium hydrogen carbonate solution, 4 g/L.

A.7.3 Apparatus and equipment: A.7.3.1 spectrophotometer; A.7.3.2 No. 1 medium-speed chromatography paper, 150 mm × 250 mm; A.7.3.3 chromatography tank, Ø240 mm × 300 mm; A.7.3.4 microsyringe, 100 μL; A.7.3.5 Nessler colour-comparison tube, 50 mL, with ground-glass stopper; A.7.3.6 glass sintered funnel, G3, pore size 15 μm–40 μm; A.7.3.7 50 mm cuvette; A.7.3.8 10 mm cuvette.

A.7.4 Procedure

A.7.4.1 Paper chromatography conditions. A.7.4.1.1 Developing solvent: n-butanol + absolute ethanol + ammonia solution = 6 + 2 + 3. A.7.4.1.2 Temperature: 20 °C–25 °C.

A.7.4.2 Preparation of sample solution. Weigh 1 g of sample (accurate to 0.001 g), dissolve in a suitable amount of water, transfer to a 100 mL volumetric flask, dilute to the mark and mix. This is a 1% sample solution.

A.7.4.3 Preparation of sample eluates. Using a microsyringe, apply 100 μL of sample solution evenly along a straight baseline 25 mm from the bottom edge of the paper; the band shall be no more than 5 mm wide and 130 mm long. Dry with a hair dryer. Place the paper in a chromatography tank containing prepared developing solvent, with the bottom edge immersed 10 mm below the solvent surface. Develop until the solvent front has risen 150 mm, or until the subsidiary colors are satisfactorily separated. Remove and dry with cool air. Develop blank paper under the same conditions, cut from an adjacent area of the same sheet as the sample paper. The schematic diagram of paper chromatography for subsidiary colors is Figure A.2.

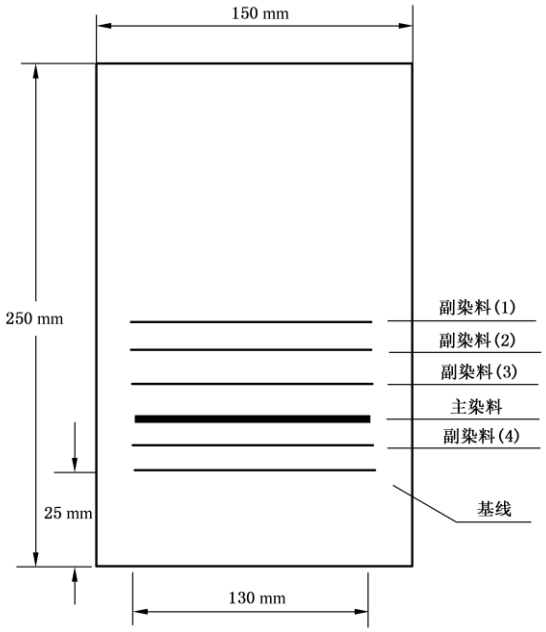

Figure A.2 — Schematic diagram of paper chromatography for subsidiary colours

Cut out each separate subsidiary-colour region and the corresponding area from the blank paper in the same size. Cut each into strips of about 5 mm × 15 mm and place separately in 50 mL Nessler tubes. Accurately add 5 mL of acetone solution, shake for 3–5 min, then accurately add 20 mL of sodium hydrogen carbonate solution and shake thoroughly. Filter naturally through G3 glass sintered funnels; the filtrates shall be clear and free of suspended matter. These are the individual subsidiary-colour eluates and blank eluates. Measure each eluate's absorbance at its maximum absorption wavelength using a spectrophotometer and a 50 mm cuvette. Use a mixture of 5 mL acetone solution and 20 mL sodium hydrogen carbonate solution as the reference.

A.7.4.4 Preparation of standard solution

Transfer 6 mL of the 1% sample solution to a 100 mL volumetric flask, dilute to the mark and mix. This is the standard solution.

A.7.4.5 Preparation of standard eluate

Apply 100 μL of standard solution evenly along a baseline 25 mm from the bottom edge of the paper and dry with a hair dryer. Develop a chromatography tank containing prepared solvent until the solvent front has risen 40 mm. Remove and dry with cool air. Cut off all developed dye portions and extract as described in A.7.4.3 to obtain the standard eluate. Measure absorbance at the maximum absorption wavelength using a 10 mm cuvette. Simultaneously develop blank paper under the same conditions and measure its eluate by the same procedure.

A.7.4.6 Calculation of results

Calculate the mass fraction of subsidiary colours, w_7, expressed as a percentage, using Formula (A.8):

$$w_7 = \{[(A_1 - b_1) + \ldots + (A_n - b_n)] / 5\} \times [b_s / (A_s - b_s)] \times (100/6) \times S \quad \ldots (A.8)$$

where $A_1 \ldots A_n$ are absorbances of individual subsidiary-colour eluates measured with a 50 mm optical path; $b_1 \ldots b_n$ are absorbances of the corresponding blank eluates measured with a 50 mm optical path; A_s is the absorbance of the standard eluate measured with a 10 mm optical path; b_s is the absorbance of the standard blank eluate measured with a 10 mm optical path; 5 is the factor converting to a 10 mm optical path; 100/6 is the factor converting the standard eluate to a 1% sample solution; and S is the mass fraction of the sample, %. Express the result to one decimal place. The absolute difference between parallel results shall not exceed 0.2 percentage point (mass fraction); take their arithmetic mean as the result.

A.8 Determination of total unreacted intermediates

A.8.1 Principle. Use reversed-phase liquid chromatography and an external-standard method to quantify each unreacted intermediate separately, then calculate their total mass fraction.

A.8.2 Reagents and materials:

A.8.2.1 methanol; A.8.2.2 ammonium acetate solution, 2 g/L;

A.8.2.3 sodium 1-naphthylamine-4-sulfonate;

A.8.2.4 sodium 7-hydroxy-1,3-naphthalenedisulfonate;

A.8.2.5 sodium 3-hydroxy-2,7-naphthalenedisulfonate;

A.8.2.6 sodium 6-hydroxy-2-naphthalenesulfonate;

A.8.2.7 sodium 7-hydroxy-1,3,6-naphthalenetrisulfonate.

A.8.3 Apparatus and equipment

A.8.3.1 Liquid chromatograph: pump flow range 0.1 mL/min–5.0 mL/min, flow stability ±1% within this range; detector, multiwavelength UV detector or equivalent. A.8.3.2 Stainless-steel column, 150 mm long × 4.6 mm internal diameter, C18 stationary phase, 5 μm particle size. A.8.3.3 Chromatography workstation or integrator. A.8.3.4 Ultrasonic generator. A.8.3.5 Sample loop, 20 μL.

A.8.4 Chromatographic conditions

A.8.4.1 Detection wavelength: 238 nm.

A.8.4.2 Column temperature: 30 °C.

A.8.4.3 Mobile phase: A, ammonium acetate solution; B, methanol. Gradient: hold A (100)/B (0) for 5 min, then apply a linear gradient over 50 min from A (100)/B (0) to A (70)/B (30).

A.8.4.4 Flow rate: 1.0 mL/min.

A.8.4.5 Injection volume: 20 μL. Optimum conditions may be selected according to the instrument; mix the mobile phase thoroughly and degas using an ultrasonic generator.

A.8.5 Preparation of sample solution. Weigh about 0.1 g of amaranth sample (accurate to 0.0001 g), dissolve in ammonium acetate solution and dilute to 100 mL.

A.8.6 Preparation of standard solutions

Separately weigh about 0.01 g (accurate to 0.0001 g) of each of the five intermediates listed in A.8.2.3–A.8.2.7, each previously dried for 24 h in a vacuum desiccator. Dissolve each in ammonium acetate solution and dilute to 100 mL. Separately transfer 10.0 mL, 5.0 mL, 2.0 mL and 1.0 mL of each stock solution to 100 mL volumetric flasks and dilute to the mark with ammonium acetate solution to prepare a series of standard solutions.

A.8.7 Procedure

Under the chromatographic conditions specified in A.8.4, use a microsyringe to inject the sample solution and series of standard solutions, filling the sample loop for chromatographic analysis. Process the results after the last component has eluted. Measure the peak areas of the standard solutions and plot separate calibration curves. Measure the peak areas of the five intermediates in the sample solution and determine each mass fraction from its calibration curve. See Appendix D for the chromatogram.

A.8.8 Calculation of results. Calculate the total mass fraction of unreacted intermediates, w_{13}, expressed as a percentage, using Formula (A.9):

$$w_{13} = w_8 + w_9 + w_{10} + w_{11} + w_{12} \quad \text{..... (A.9)}$$

where w_8 is the mass fraction of sodium 1-naphthylamine-4-sulfonate, %; w_9 is the mass fraction of sodium 7-hydroxy-1,3-naphthalenedisulfonate, %; w_{10} is the mass fraction of sodium 3-hydroxy-2,7-naphthalenedisulfonate, %; w_{11} is the mass fraction of sodium 6-hydroxy-2-naphthalenesulfonate, %; and w_{12} is the mass fraction of sodium 7-hydroxy-1,3,6-naphthalenetrisulfonate, %.

A.9 Determination of unsulfonated primary aromatic amines (as aniline)

A.9.1 Principle

Extract unsulfonated primary aromatic amines from the sample with ethyl acetate. Diazotize and couple the extract and aniline standard solution separately, then compare the absorbances of the resulting dyes.

A.9.2 Reagents and materials

A.9.2.1 ethyl acetate;

A.9.2.2 hydrochloric acid solution, 1 + 10;

A.9.2.3 hydrochloric acid solution, 1 + 3;

A.9.2.4 potassium bromide solution, 500 g/L;

A.9.2.5 sodium carbonate solution, 200 g/L;

A.9.2.6 sodium hydroxide solution, 40 g/L;

A.9.2.7 sodium hydroxide solution, 4 g/L;

A.9.2.8 R-salt solution, 20 g/L;

A.9.2.9 sodium nitrite solution, 3.52 g/L;

A.9.2.10 aniline standard solution, 0.1000 g/L.

Preparation of aniline standard solution: weigh 0.5000 g of freshly distilled aniline in a small beaker and transfer to a 500 mL volumetric flask. Rinse the beaker three times with a total of 150 mL of hydrochloric acid solution (1 + 3) and combine the rinsings in the flask; dilute to the mark with water. Transfer 25 mL of this solution to a 250 mL volumetric flask and dilute it to the mark with water. The aniline concentration is 0.1000 g/L.

A.9.3 Apparatus and equipment

A.9.3.1 visible spectrophotometer;

A.9.3.2 cuvette, 40 mm.

A.9.4 Preparation of sample extract

Weigh about 2.0 g of sample (accurate to 0.001 g) into a 150 mL beaker. Add 100 mL of water and 5 mL of sodium hydroxide solution (40 g/L) and stir in a warm-water bath until completely dissolved. Transfer to a separatory funnel and rinse the beaker with a small amount of water. Extract twice, each time with 50 mL of ethyl acetate, and combine the extracts. Wash the ethyl acetate extract with 10 mL of sodium hydroxide solution (4 g/L) to remove trace pigments. Back-extract the ethyl acetate solution three times, each time with 10 mL of hydrochloric acid solution (1 + 3). Combine the hydrochloric acid extracts, dilute to 100 mL with water and mix. This is the sample extract.

A.9.5 Preparation of standard control solution

Transfer 2.0 mL of aniline standard solution to a 100 mL volumetric flask, dilute to the mark with hydrochloric acid solution (1 + 10), and mix.

A.9.6 Preparation of diazotization-coupling solutions

Transfer 10 mL of sample extract to a clean, transparent test tube and cool for 10 min in an ice-water bath. Add 1 mL of potassium bromide solution and 0.5 mL of sodium nitrite solution, shake vigorously, and cool for a further 10 min in the ice-water bath for diazotization. In a separate 25 mL volumetric flask, add 1 mL of R-salt solution and 10 mL of sodium carbonate solution. Add the aniline diazonium solution from the test tube to this flask while gently shaking. Rinse the test tube with a small amount of water and add the rinsings to the flask; dilute to the mark with water. Mix thoroughly and keep in the dark for 15 min. This is the sample diazotization-coupling solution. Prepare the standard diazotization-coupling solution in the same way, using 10 mL of standard control solution.

A.9.7 Preparation of reference solution

Transfer 10 mL of hydrochloric acid solution (1 + 10), 10 mL of sodium carbonate solution and 1 mL of R-salt solution to a 25 mL volumetric flask and dilute it to the mark with water.

A.9.8 Procedure

Place the standard and sample diazotization-coupling solutions separately in cuvettes and measure their absorbances, A_a and A_β, at 510 nm, using the solution prepared in A.9.7 as the reference.

A.9.9 Acceptance criterion

The sample complies if $A_\beta \leq A_a$.

A.10 Determination of arsenic

A.10.1 Principle. After wet digestion of amaranth, prepare a sample solution and determine arsenic content by atomic absorption spectrometry.

A.10.2 Reagents and materials

A.10.2.1 nitric acid;

A.10.2.2 sulfuric acid solution, 1 + 1;

A.10.2.3 nitric acid–perchloric acid mixture, 3 + 1;

A.10.2.4 arsenic (As) standard solution, prepared and standardized in accordance with GB/T 602 and then diluted to three appropriate concentrations according to instrument requirements;

A.10.2.5 sodium hydroxide solution, 1 g/L;

A.10.2.6 sodium borohydride solution, 8 g/L (solvent: sodium hydroxide solution, 1 g/L);

A.10.2.7 hydrochloric acid solution, 1 + 10;

A.10.2.8 potassium iodide solution, 200 g/L.

A.10.3 Apparatus and equipment

A.10.3.1 Atomic absorption spectrometer

A.10.3.2 Instrument reference conditions: arsenic hollow-cathode lamp analytical wavelength, 193.7 nm; slit width, 0.5 nm–1.0 nm; lamp current, 6 mA–10 mA.

A.10.3.3 Carrier-gas flow rate: argon, 250 mL/min.

A.10.3.4 Atomizer temperature: 900 °C.

A.10.4 Procedure

A.10.4.1 Sample digestion. Weigh about 1 g of sample (accurate to 0.001 g) into a 250 mL Erlenmeyer or round-bottom flask. Add 10 mL–15 mL of nitric acid and 2 mL of sulfuric acid solution, mix, and heat gently to drive off nitrogen dioxide. When the solution turns brown, stop heating and cooling. Add 5 mL of the nitric acid–perchloric acid mixture and heat strongly until the solution is clear or pale yellow. If it remains unclear, cool, add another 5 mL of the mixture, and continue heating until the solution is clear and colorless or pale yellow and white fumes appear. Avoid heating to dryness or charring. Stop heating and cool; add 5 mL of water and heat to boiling to remove residual nitric acid–perchloric acid (boil with additional water once if necessary). Continue heating until white fumes appear and maintain for 10 min. Cool and transfer to a 100 mL volumetric flask; if the solution is cloudy or contains precipitate or mechanical impurities, filter. Dilute the mark with hydrochloric acid solution. Prepare a blank solution in the same way.

A.10.4.2 Determination

Transfer 25 mL of the digested sample solution to a 50 mL volumetric flask, add 5 mL of potassium iodide solution, dilute to the mark with hydrochloric acid solution and mix. Allow it to stand for 15 min. Prepare a blank test solution from the blank solution in the same way. Turn on the instrument and allow the instrument and arsenic hollow-cathode lamp to warm thoroughly until the baseline is stable. Use sodium borohydride solution as the hydride-generation reducing agent. Inject the standard blank, standard solutions, sample blank test solution and sample solution into the order specified by the computer. After analysis, the computer automatically generates the calibration curve and the arsenic concentration in the sample solution after subtracting the sample blank. Enter sample information (e.g. name, sample mass and dilution volume) for automatic calculation of arsenic content. The absolute difference between parallel results shall not exceed 0.1 mg/kg; take their arithmetic means as the result.

A.11 Determination of lead

A.11.1 Principle

After wet digestion of amaranth, prepare a sample solution and determine lead content by atomic absorption spectrometry.

A.11.2 Reagents and materials

A.11.2.1 lead (Pb) standard solution, prepared and standardized in accordance with GB/T 602 and then diluted to three appropriate concentrations according to instrument requirements;

A.11.2.2 sodium hydroxide solution, 1 g/L;

A.11.2.3 sodium borohydride solution, 8 g/L (solvent: sodium hydroxide solution, 1 g/L);

A.11.2.4 hydrochloric acid solution, 1 + 10.

A.11.3 Apparatus and equipment

A.11.3.1 Atomic absorption spectrometer.

A.11.3.2 Instrument reference conditions: flame atomic absorption spectrometry, Method 3, in GB 5009.12—2010.

A.11.4 Procedure

The sample solution and blank solution prepared in A.10.4.1 may be used directly. Perform the analysis in accordance with flame atomic absorption spectrometry, Method 3, in GB 5009.12—2010. The absolute difference between parallel results shall not exceed 1.0 mg/kg; take their arithmetic means as the result.

APPENDIX B

(Normative Appendix)

Preparation of Standard Titanium Trichloride Titration Solution

B.1 Reagents and materials

B.1.1 Hydrochloric acid.

B.1.2 Ammonium ferrous sulfate.

B.1.3 Ammonium thiocyanate solution: 200 g/L.

B.1.4 Sulfuric acid solution: 1 + 1.

B.1.5 Titanium trichloride solution.

B.1.6 Potassium dichromate standard titration solution: c(1/6 $K_2Cr_2O_7$) = 0.1 mol/L; prepare and standardize in accordance with GB/T 602.

B.2 Apparatus and equipment

See Figure A.1.

B.3 Preparation of standard titanium trichloride titration solution

B.3.1 Preparation

Transfer 100 mL of titanium trichloride solution and 75 mL of hydrochloric acid into a 1 000 mL brown volumetric flask. Dilute the mark with water that has been freshly boiled and cooled to room temperature, mix well, and immediately transfer the solution to a light-protected bottle with a bottom outlet. Store under a carbon dioxide atmosphere.

B.3.2 Standardization

Weigh about 3 g (accurate to 0.0001 g) of ammonium ferrous sulfate into a 500 mL conical flask. Under a protective stream of carbon dioxide, add 50 mL of freshly boiled and cooled water and dissolve. Add 25 mL of sulfuric acid solution and continue passing carbon dioxide below the liquid surface to maintain protection. Quickly and accurately add 35 mL of potassium dichromate standard titration solution. Then titrate with the titanium trichloride standard solution to be standardized until close to the calculated endpoint. Immediately add 25 mL of ammonium thiocyanate solution and continue titrating with the titanium trichloride standard solution to be standardized until the colour changes from red to green; this is the endpoint. The entire titration shall be carried out under a protective stream of carbon dioxide. Perform a blank test at the same time.

B.3.3 Calculation of results

The concentration of the standard titanium trichloride solution, expressed as c($TiCl_3$) in moles per litre (mol/L), is calculated using Formula (B.1):

$$c(TiCl_3) = cV_1 / (V_2 - V_3) \qquad \text{(B.1)}$$

where:

c is the exact concentration of the potassium dichromate standard titration solution, in moles per litre (mol/L);

V_1 is the exact volume of the potassium dichromate standard titration solution, in milliliters (mL);

V_2 is the exact volume of the standard titanium trichloride titration solution consumed in titrating the solution in which the potassium dichromate standard titration solution has oxidized iron (II) to iron (III), in milliliters (mL);

V_3 is the exact volume of the standard titanium trichloride titration solution consumed in the blank titration, in milliliters (mL).

Express the result to four decimal places.

The above standardization shall be performed immediately when the sample is analyzed.

Appendix C (Normative) — Preparation of barium chloride standard solution

C.1 Reagents and materials

C.1.1 Barium chloride.

C.1.2 Ammonia solution.

C.1.3 Sulfuric acid standard titrant, $c(\frac{1}{2}H_2SO_4)$=0.1 mol/L, prepared and standardized according to GB/T 601.

C.1.4 Sodium rhodizonate indicator (dissolve 0.1 g in 10 mL water; prepare immediately before use). C.1.5 Wide-range pH paper.

C.2 Preparation

Dissolve 12.25 g barium chloride in 500 mL water, transfer to a 1,000 mL volumetric flask, dilute to the mark and mix.

C.3 Standardization

Transfer 20 mL sulfuric acid standard titrant to a 250 mL conical flask, add 50 mL water and neutralize with ammonia to pH 8 as indicated by wide-range pH paper. Titrate with barium chloride standard solution using sodium rhodizonate as an external indicator. The endpoint is a rose-red spot at the junction of the reaction mixture and indicator on filter paper that remains for 2 min.

C.4 Calculation

Calculate $c(\frac{1}{2}BaCl_2)$, in mol/L, using Formula (C.1):

$$c(\frac{1}{2}BaCl_2) = c_1V_4/V_5 \quad \text{.....(C.1)}$$

Where c_1 is the exact concentration of sulfuric acid standard titrant (mol/L), V_4 is its volume (mL), and V_5 is the volume of barium chloride standard solution consumed (mL). Report to four decimal places.

Appendix D (Informative) — Illustrative liquid chromatogram of amaranth and retention times

D.1 Illustrative chromatogram

See Figure D.1

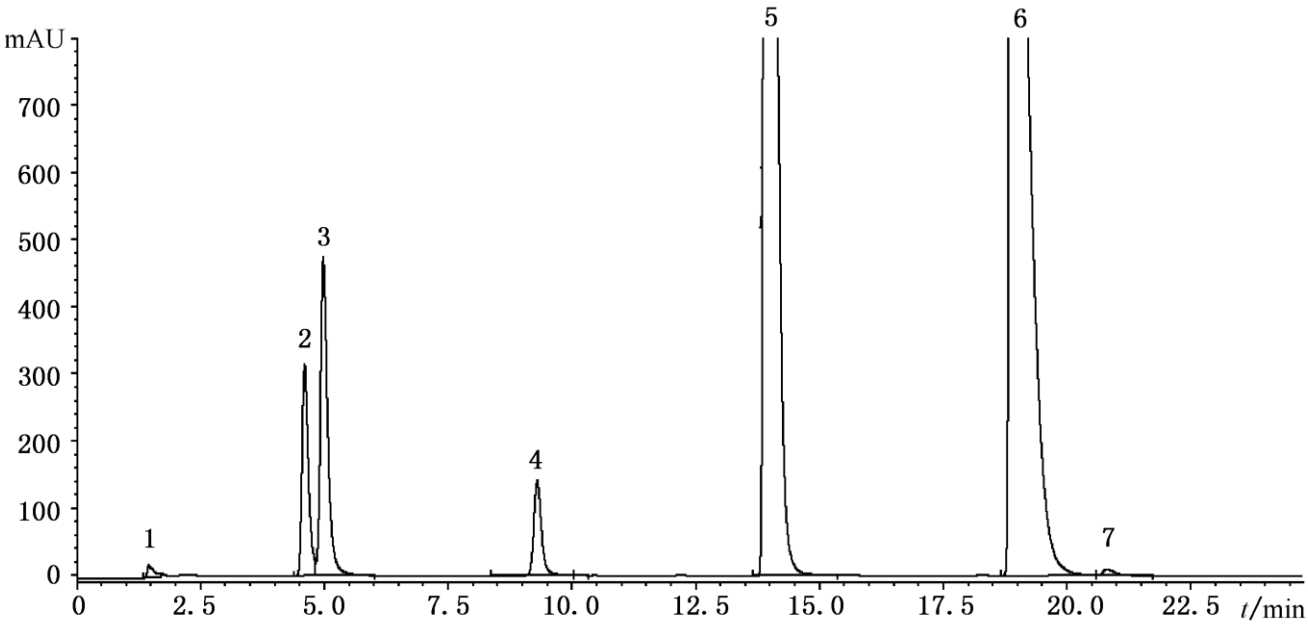

Peak identities are: 1 — sodium 6-hydroxy-1,3,6-naphthalenetrisulfonate; 2 — sodium 7-hydroxy-1,3-naphthalenedisulfonate; 3 — sodium 3-hydroxy-2,7-naphthalenedisulfonate; 4 — sodium 1-naphthylamine-4-sulfonate; 5 — sodium 6-hydroxy-2-naphthalenesulfonate; 6 — amaranth; 7 — unknown compound.

D.2 Retention times

Peak no.	**Component**	**Retention time (min)**
1	Sodium 6-hydroxy-1,3,6-naphthalenetrisulfonate	2.44
2	Sodium 7-hydroxy-1,3-naphthalenedisulfonate	4.59
3	Sodium 3-hydroxy-2,7-naphthalenedisulfonate	4.97
4	Sodium 1-naphthylamine-4-sulfonate	9.29
5	Sodium 6-hydroxy-2-naphthalenesulfonate	13.92
6	Amaranth	18.88

Note: Retention times may vary with different instruments, separation columns and even injection times, but the elution order of the components remains unchanged.

END UNOFFICIAL TRANSLATION

8. Amendment to GB 4481.1-2010 National Food Safety Standard — Food Additive: Tartrazine

Amendment item

Add the following “note” to Table 2 under “4.2 Physicochemical Indices”

"Note: Commercialized liquid tartrazine products shall use tartrazine conforming to this standard as raw material, and may add food raw materials conforming to corresponding standards and/or food additives conforming to national food safety standards—such as benzoic acid and its sodium salt, sorbic acid and its potassium salt, propylene glycol, glycerin, propylene glycol alginate, tweens, sorbitol, sorbitol solution, ascorbic acid (vitamin C), tertiary butylhydroquinone (TBHQ), vitamin E—as well as thickeners and acidity regulators. The tartrazine content and sensory requirements of commercialized products shall comply with the label claims. The total loss on drying, chlorides, and sulfates indices is not applicable to commercialized liquid products; all other indices shall comply with the provisions of this standard."

BEGIN UNOFFICIAL TRANSLATION

GB 4481.1-2010 National Food Safety Standard Food Additive — Tartrazine

Issued on: 2010-12-21

Implemented on: 2011-02-21

Published by the Ministry of Health of the People's Republic of China

Preface

This standard replaces GB 4481.1-1999 *Food Additive — Tartrazine*.

Compared with GB 4481.1-1999, the main changes in this standard are as follows:

- Safety warnings were added;
- The quality specification of ≥ 60.0% was removed, and the index of ≥ 85.0% was changed to ≥ 87.0%;
- The indexes for loss on drying, total chlorides, and total sulfates were changed from ≤ 15.0% to ≤ 13.0%, and the test methods were modified;
- The water-insoluble matter index was changed from ≤ 0.30% to ≤ 0.20%;
- The identification test method was modified;
- The allowable difference for parallel determinations in spectrophotometric colorimetry was changed from ≤ 2.0% to ≤ 1.0%;
- The index and test method for unsulfonated primary aromatic amines (calculated as aniline) were added;
- Indexes and test methods for unreacted intermediates and by-products—such as sulfanilic acid, disodium salt of 1-(4'-sulfophenyl)-3-carboxy-5-pyrazolone, sodium salt of 1-(4'-sulfophenyl)-3-carbomethoxy (or carbethoxy)-5-pyrazolone, and disodium salt of 4,4'-(diazoamino)dibenzenesulfonic acid—were added;

- The test method for arsenic (As) was changed from the chemical limit test to atomic absorption spectrometry;
- The quality specification for heavy metals (calculated as Pb) was removed;
- The index and test method for lead (Pb) were added;
- The index and test method for mercury (Hg) were added.

Appendices A, B, and C of this standard are normative appendices, and Appendix D is an informative appendix. The previous versions of the standard replaced by this standard are:

- GB 4481.1-1984, GB 4481.1-1999.

1 Scope

This standard applies to the food additive tartrazine, which is prepared by diazotization of sulfanilic acid followed by coupling with 1-(4'-sulfophenyl)-3-carbomethoxy (or carbethoxy)-5-pyrazolone and subsequent hydrolysis, or by diazotization of sulfanilic acid followed by coupling with 1-(4'-sulfophenyl)-3-carboxy-5-pyrazolone.

2 Normative References

The files referenced in this standard are indispensable for the application of this standard. For dated references, only the dated version applies to this standard. For undated references, the latest version (including all amendments) applies to this standard.

3 Chemical Name, Structural Formula, Molecular Formula, and Relative Molecular Mass

3.1 Chemical Name

Trisodium 1-(4'-sulfophenyl)-3-carboxy-4-(4-sulfophenylazo)-5-pyrazolone

3.2 Structural Formula

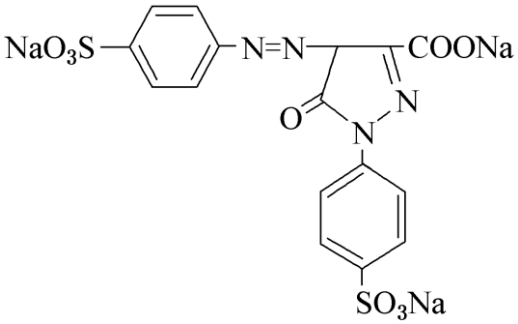

3.3 Molecular Formula

$$C_{16}H_9N_4Na_3O_9S_2$$

3.4 Relative Molecular Mass

534.36 (based on 2007 international relative atomic masses)

4 Technical Requirements

4.1 Sensory Requirements: Must comply with the provisions of Table 1

Table 1 Sensory Requirements

Item	Requirement	Test Method
Color	Orange-yellow or bright orange	Visual evaluation under natural light
Texture/State	Powder or granules	

4.2 Physicochemical Indices: Must comply with the provisions of Table 2

.

Table 2 Physicochemical Indices

Item	Index	Test Method
Tartrazine (w), % ≥	87.0	Appendix A, A.4
Total loss on drying, chlorides (calculated as NaCl), and sulfates (calculated as Na_2SO_4), % ≤	13.0	Appendix A, A.5
Water-insoluble matter, % ≤	0.20	Appendix A, A.6
Sodium sulfanilate (w), % ≤	0.20	Appendix A, A.7
Disodium salt of 1-(4'-sulfophenyl)-3-carboxy-5-pyrazolone (w), % ≤	0.20	Appendix A, A.8
Sodium salt of 1-(4'-sulfophenyl)-3-carbomethoxy (or carbethoxy)-5-pyrazolone (w), % ≤	0.10	Appendix A, A.9
Disodium salt of 4,4'-(diazoamino)dibenzenesulfonic acid, % ≤	0.05	Appendix A,

Item	Index	Test Method
		A.10
Unsulfonated primary aromatic amines (calculated as aniline), % ≤	0.01	Appendix A, A.11
Subsidiary dyes (*w*), % ≤	1.0	Appendix A, A.12
Arsenic (As), (mg/kg) ≤	1.0	Appendix A, A.13
Lead (Pb), (mg/kg) ≤	10.0	Appendix A, A.14
Mercury (Hg), (mg/kg) ≤	1.0	Appendix A, A.15

Appendix A

(Normative Appendix)

Test Methods

A.1 Safety Precautions

Some reagents used in the test methods of this standard are toxic or corrosive. Operations shall be carried out in accordance with relevant regulations, and caution must be carried out during operation. If splashed onto the skin, rinse immediately with water; seek medical treatment immediately for severe cases. Volatile acids must be handled inside a fume hood.

A.2 General Provisions

Unless other requirements are specified, the reagents and water used in this standard refer to analytical purity reagents and grade-three water specified in GB/T 6682-2008. Standard volumetric solutions, impurity standard solutions, preparations, and products required in the tests shall be prepared and calibrated in accordance with GB/T 601, GB/T 602, and GB/T 603, unless otherwise specified.

A.3 Identification Tests

A.3.1 Reagents and Materials

- A.3.1.1 Sulfuric acid.
- A.3.1.2 Ammonium acetate solution: 1.5 g/L.

A.3.2 Instruments and Equipment

- A.3.2.1 Spectrophotometer.
- A.3.2.2 Cuvette: 10 mm.

A.3.3 Identification Methods

The following conditions must be met:

- A.3.3.1 Weigh about 0.1 g of sample (accurate to 0.01 g), dissolve in 100 mL of water, yielding a clear yellow solution.
- A.3.3.2 Weigh about 0.1 g of sample (accurate to 0.01 g), add 10 mL of sulfuric acid to yield a yellow color. Add 2 to 3 drops of this solution into 5 mL of water to yield a yellow color.
- A.3.3.3 Weigh about 0.1 g of sample (accurate to 0.01 g), dissolve in 100 mL of ammonium acetate solution. Take 1 mL of this solution, add ammonium acetate solution to make 100 mL; the maximum absorption wavelength of this solution is 428 nm $\pm$ 2 nm.

A.4 Determination of Tartrazine

A.4.1 Titanium Trichloride Titration Method (Arbitration Method)

A.4.1.1 Summary of Method

In an acidic medium, the azo group in tartrazine is reduced and decomposed by titanium trichloride. The content is calculated based on the consumption of the titanium trichloride standard volumetric solution.

A.4.1.2 Reagents and Materials

- A.4.1.2.1 Sodium hydrogen tartrate.
- A.4.1.2.2 Titanium trichloride standard volumetric solution: $c(TiCl_3) = 0.1$ mol/L (prepare and use immediately; preparation method is detailed in Appendix B).
- A.4.1.2.3 Carbon dioxide in steel cylinders.

A.4.1.3 Instruments and Equipment

The setup diagram for the titanium trichloride titration method is shown in Figure A.1.

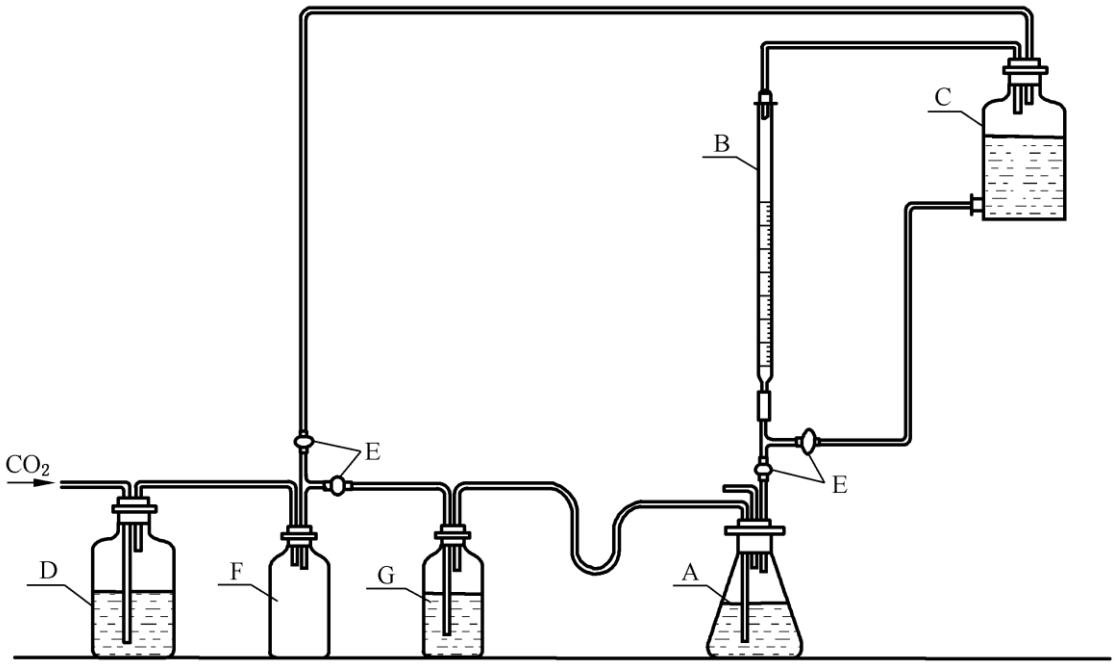

- A — Conical flask (500 mL);
- B — Brown burette (50 mL);
- C — Lower-outlet glass bottle wrapped with black paper (2000 mL);
- D — Container (5000 mL) filled with an equal volume mixture of 100 g/L ammonium carbonate solution and 100 g/L ferrous sulfate solution;
- E — Stopcock;
- F — Empty bottle;
- G — Gas-washing bottle filled with water.

A.4.1.4 Analytical Procedure

Weigh about 0.5 g of sample (accurate to 0.0001 g), place it in a 500 mL conical flask, dissolve in 50 mL of water that has been boiled and cooled to room temperature. Add 15 g of sodium hydrogen tartrate and 150 mL of boiling water. After shaking to dissolve, assemble the apparatus as shown in Figure A.1. Pass carbon dioxide beneath the liquid surface while heating to boiling and titrate with titanium trichloride standard volumetric solution until its intrinsic color disappears, which is the endpoint.

A.4.1.5 Calculation of Results

The mass fraction of tartrazine, expressed as a percentage (%), is calculated according to formula (A.1):

$$w_1 = \frac{c(V/1000)(M/4)}{m_1} \times 100\%$$

(A.1)

Where:

- c — Exact concentration of the titanium trichloride standard volumetric solution, in moles per liter (mol/L);
- V — Exact volume of titanium trichloride standard volumetric solution consumed by titrating the sample, in milliliters (mL);
- M — Molar mass of tartrazine, in grams per mole [$M(C_{16}H_9N_4Na_3O_9S_2) = 534.36$], in grams per mole (g/mol);
- m_1 — Numerical value of the sample mass, in grams (g).

The calculation result is expressed to one decimal place. The absolute difference between parallel measurement results shall not be greater than 1.0% (mass fraction), and the arithmetic mean of the results is taken as the determination result.

A.4.2 Spectrophotometric Colorimetry

A.4.2.1 Summary of Method

Dissolve the sample and a tartrazine reference standard of known purity separately in water, dilute to volume with ammonium acetate solution, measure their absorbance values at the maximum absorption wavelength, and calculate the content.

A.4.2.2 Reagents and Materials

- A.4.2.2.1 Ammonium acetate solution: 1.5 g/L.
- A.4.2.2.2 Tartrazine reference standard: $\geq 87.0\%$ (mass fraction, determined according to A.4.1).

A.4.2.3 Instruments and Equipment

- A.4.2.3.1 Spectrophotometer.
- A.4.2.3.2 Cuvette: 10 mm.

A.4.2.4 Preparation of Tartrazine Standard Solution

Weigh about 0.25 g of tartrazine reference standard (accurate to 0.0001 g), dissolve in an appropriate amount of water, transfer to a 1000 mL volumetric flask, dilute to volume with water, and mix well. Pipette 10 mL into a 500 mL volumetric flask, dilute to volume with ammonium acetate solution, mix well, and set aside.

A.4.2.5 Preparation of Tartrazine Sample Solution

The weighing and operational methods are the same as those for the preparation of the standard solution in A.4.2.4.

A.4.2.6 Analytical Procedure

Place the tartrazine standard solution and the tartrazine sample solution into separate 10 mm cuvettes. Measure their respective absorbance values with a spectrophotometer at the maximum absorption wavelength, using the ammonium acetate solution as the reference liquid.

A.4.2.7 Calculation of Results

The mass fraction of tartrazine, expressed as a percentage (%), is calculated according to formula (A.2):

$$w_1 = \frac{Am_0}{A_0 m} \times w_0$$

(A.2)

Where:

- A — Absorbance value of the tartrazine sample solution;
- m_0 — Numerical value of the mass of the tartrazine reference standard, in grams (g);
- A_0 — Absorbance value of the tartrazine standard solution;
- m — Numerical value of the sample mass, in grams (g);
- w_0 — Mass fraction of the tartrazine reference standard, %.

The calculation result is expressed to one decimal place. The absolute difference between parallel measurement results shall not be greater than 1.0% (mass fraction), and the arithmetic mean of the results is taken as the determination result.

A.5 Determination of Total Loss on Drying, Chlorides (calculated as NaCl), and Sulfates (calculated as Na_2SO_4)

A.5.1 Determination of Loss in Drying

A.5.1.1 Analytical Procedure

Weigh about 2 g of sample (accurate to 0.001 g), place it in a weighing bottle previously dried to constant mass in a $135^{\circ}C \pm 2^{\circ}C$ constant-temperature drying oven, and dry to constant mass in the $135^{\circ}C \pm 2^{\circ}C$ constant-temperature drying oven.

A.5.1.2 Calculation of Results

The mass fraction of loss on drying, denoted as w_2, expressed as a percentage (%), is calculated according to formula (A.3):

$$w_2 = \frac{m_2 - m_3}{m_2} \times 100\%$$

(A.3)

Where:

- m_2 — Numerical value of the sample mass before drying, in grams (g);
- m_3 — Numerical value of the sample mass after drying to constant mass, in grams (g).

The calculation result is expressed to one decimal place. The absolute difference between parallel measurement results shall not be greater than 0.2% (mass fraction), and the arithmetic mean of the results is taken as the determination result.

A.5.2 Determination of Chlorides (calculated as NaCl)

A.5.2.1 Reagents and Materials

- A.5.2.1.1 Nitrobenzene.
- A.5.2.1.2 Activated carbon: 767 needle-type.
- A.5.2.1.3 Nitric acid solution: $1 + 1$.
- A.5.2.1.4 Silver nitrate solution: $c(AgNO_3) = 0.1$ mol/L.
- A.5.2.1.5 Ferric ammonium sulfate solution:
    - Preparation method: Weigh about 14 g of ferric ammonium sulfate, dissolve in 100 mL of water, filter, add 10 mL of nitric acid, and store in a brown bottle.
- A.5.2.1.6 Ammonium thiocyanate standard volumetric solution: $c(NH_4CNS) =$ 0.1 mol/L.

A.5.2.2 Preparation of Sample Solution

Weigh about 2 g of sample (accurate to 0.001 g), dissolve in 150 mL of water, add about 15 g of activated carbon, gently boil for 2 min to 3 min, add 1 mL of nitric acid solution, shake continuously and evenly, and let stand for 30 min (shaking occasionally during this time). Filter through dry filter paper. If the filtrate is colored, add another 5 g of activated carbon, let stand for 1 h with occasional shaking, and filter again through dry filter paper (if still colored, replace the activated carbon and repeat the operation until the filtrate is colorless). Wash the activated carbon three times with 10 mL of water each time. Combine the filtrates and transfer to a 200 mL volumetric flask, add water to the mark, and mix well. This is used for the determination of chloride and sulfate contents.

A.5.2.3 Analytical Procedure

Pipette 50 mL of the sample solution into a 500 mL conical flask, add 2 mL of nitric acid solution, 10 mL of silver nitrate solution (add more if the chloride content is high), and 5 mL of nitrobenzene. Shake vigorously until silver chloride coagulates. Add 1 mL of ferric ammonium sulfate solution, and titrate the excess silver nitrate with ammonium thiocyanate standard volumetric solution to the endpoint, maintaining it for 1 min. Meanwhile, perform a blank test in the same manner.

A.5.2.4 Calculation of Results

Chlorides (calculated as NaCl), expressed as mass fraction (%), are calculated according to formula (A.4):

$$w_3 = \frac{c_1[(V_1 - V_0)/1000]M_1}{m_4(50/200)} \times 100\%$$

(A.4)

Where:

- c_1 — Exact concentration of the ammonium thiocyanate standard volumetric solution, in moles per liter (mol/L);
- V_1 — Exact volume of ammonium thiocyanate standard volumetric solution consumed in titrating the blank solution, in milliliters (mL);
- V_0 — Exact volume of ammonium thiocyanate standard volumetric solution consumed in titrating the sample solution, in milliliters (mL);
- M_1 — Molar mass of sodium chloride, in grams per mole [$M_1(NaCl) = 58.44$], in grams per mole (g/mol);
- m_4 — Numerical value of the sample mass, in grams (g).

The calculation result is expressed to one decimal place. The absolute difference between parallel measurement results shall not be greater than 0.3% (mass fraction), and the arithmetic mean of the results is taken as the determination result.

A.5.3 Determination of Sulfates (calculated as Na_2SO_4)

A.5.3.1 Reagents and Materials

- A.5.3.1.1 Sodium hydroxide solution: 2 g/L.
- A.5.3.1.2 Hydrochloric acid solution: $1 + 99$.
- A.5.3.1.3 Barium chloride standard volumetric solution: $c(1/2BaCl_2) = 0.1$ mol/L (preparation method detailed in Appendix C).
- A.5.3.1.4 Phenolphthalein indicator solution: 10 g/L.
- A.5.3.1.5 Sodium rhodizonate indicator solution: Weigh 0.1 g of sodium rhodizonate, dissolve in 10 mL of water (prepare before use).

A.5.3.2 Analytical Procedure

Pipette 25 mL of the sample solution (A.5.2.2) into a 250 mL conical flask, add 1 drop of phenolphthalein indicator solution, add sodium hydroxide solution dropwise until it turns pink, and then add hydrochloric acid solution dropwise until the pink color disappears. Shake well, and while stirring continuously after dissolution, titrate with barium chloride standard volumetric solution using sodium rhodizonate indicator solution as an external indicator. The endpoint is reached when the reaction liquid and the indicator solution intersect on filter paper to form a rose-red spot that persists for 2 min without fading. At the same time, perform a blank test using the same method.

A.5.3.3 Calculation of Results

Sulfates (calculated as Na_2SO_4), expressed as mass fraction (w_4), in %, are calculated according to formula (A.5):

$$w_4 = \frac{c_2[(V_3 - V_2)/1000](M_2/2)}{m_4(25/200)} \times 100\%$$

(A.5)

Where:

- c_2 — Exact concentration of the barium chloride standard volumetric solution, in moles per liter (mol/L);
- V_3 — Exact volume of barium chloride standard volumetric solution consumed in titrating the sample solution, in milliliters (mL);
- V_2 — Exact volume of barium chloride standard volumetric solution consumed in titrating the blank solution, in milliliters (mL);
- M_2 — Numerical value of the molar mass of sodium sulfate, in grams per mole [$M_2(Na_2SO_4) = 142.04$], in grams per mole (g/mol);
- m_4 — Numerical value of the sample mass, in grams (g).

The calculation result is expressed to one decimal place. The absolute difference between parallel measurement results shall not be greater than 0.2% (mass fraction), and the arithmetic means of the results are taken as the determination result.

A.5.4 Calculation of Total Results for Loss on Drying, Chlorides (calculated as NaCl), and Sulfates (calculated as Na_2SO_4)

The total mass fraction of loss on drying, chlorides (calculated as NaCl), and sulfates (calculated as Na_2SO_4), denoted as w_5, expressed in %, is calculated according to formula (A.6):

$$w_5 = w_2 + w_3 + w_4$$

(A.6)

Where:

- w_2 — Mass fraction of loss on drying, %;
- w_3 — Mass fraction of chlorides (calculated as NaCl), %;
- w_4 — Mass fraction of sulfates (calculated as Na_2SO_4), %.

The calculation result is expressed to one decimal place.

A.6 Determination of Water-Insoluble Matter

A.6.1 Instruments and Equipment

- A.6.1.1 Glass sintered crucible: G4, pore size 5μm.
- A.6.1.2 Constant-temperature drying oven.

A.6.2 Analytical Procedure

Weigh about 3 g of sample (accurate to 0.001 g), place it in a 500 mL beaker, add 250 mL of hot water at 50°C to 60°C to dissolve it. Filter through a glass sintered crucible previously dried to constant mass at 135°C ± 2°C, wash thoroughly with hot water until the filtrate is colorless, and dry to constant mass in a constant-temperature drying oven at 135°C ± 2°C.

A.6.3 Calculation of Results

Water-insoluble matter, expressed as mass fraction w_6, in %, is calculated according to formula (A.7):

$$w_6 = \frac{m_6}{m_5} \times 100\%$$

(A.7)

Where:

- m_6 — Numerical value of the mass of water-insoluble matter after drying, in grams (g);
- m_5 — Numerical value of the sample mass, in grams (g).

The calculation result is expressed to two decimal places. The absolute difference between parallel measurement results shall not be greater than 0.05% (mass fraction), and the arithmetic means of the results are taken as the determination result.

A.7 Determination of Sodium Sulfanilate

A.7.1 Summary of Method

Reverse-phase liquid chromatography is used, with external standardization for quantification, to calculate the mass fraction of sodium sulfanilate.

A.7.2 Reagents and Materials

- A.7.2.1 Methanol.
- A.7.2.2 Sodium sulfanilate.
- A.7.2.3 Ammonium acetate solution: 2 g/L.

A.7.3 Instruments and Equipment

- A.7.3.1 High-performance liquid chromatograph: Infusion pump flow rate range 0.1 mL/min to 5.0 mL/min, flow rate stability within this range is ±1%; detector — multi-wavelength ultraviolet spectrophotometric detector or UV spectrophotometric detector with equivalent performance.
- A.7.3.2 Chromatographic column: Stainless steel column, length 150 mm, internal diameter 4.6 mm, stationary phase is C_{18}, particle size 5μm.

- A.7.3.3 Chromatographic workstation or integrator.
- A.7.3.4 Ultrasonic generator.
- A.7.3.5 Sample loop: 20μL.
- A.7.3.6 Micro-syringe: 20μL to 100μL.

A.7.4 Chromatographic Analysis Conditions

- A.7.4.1 Detection wavelength: 254 nm.
- A.7.4.2 Column temperature: 40°C.
- A.7.4.3 Mobile phase: A, ammonium acetate solution; B, methanol;
    - Concentration gradient: 40 min linear concentration gradient from A(95): B(5) to A (50): B (50).
- A.7.4.4 Flow rate: 1 mL/min.
- A.7.4.5 Injection volume: 20μL.
    - Note: Optimal analytical conditions may be selected according to different instruments. The mobile phase should be mixed well and degassed using an ultrasonic generator.

A.7.5 Preparation of Sample Solution

Weigh 0.1 g of sample (accurate to 0.0001 g), dissolve with ammonium acetate solution, and dilute to 100 mL. This is the sample solution.

A.7.6 Preparation of Standard Solutions

Weigh 0.01 g (accurate to 0.0001 g) of sodium sulfanilate previously dried in a vacuum desiccator for 24 h, dissolve with ammonium acetate solution, and dilute to 100 mL. Pipette 10 mL of the above solution, add ammonium acetate solution to dilute to 100 mL, and then pipette 2.5 mL, 2.0 mL, and 1.0 mL of this solution respectively, and dilute to volume with ammonium acetate solution to 100 mL to serve as a series of standard solutions.

A.7.7 Analytical Procedure

Under the chromatographic conditions specified in A.7.4, use a micro-syringe to draw the sample solution and each of the series of standard solutions, inject and fill the sample loop for chromatographic detection. After the elution of the last component is complete, process the results. Measure the peak areas of sodium sulfanilate in the series of standard solutions to plot a standard curve. Measure the peak area of sodium sulfanilate in the sample solution and calculate the content of sodium sulfanilate based on the standard curve. See Appendix D for the chromatogram.

A.8 Determination of Disodium Salt of 1-(4'-Sulfophenyl)-3-carboxy-5-pyrazolone

A.8.1 Summary of Method

Reverse-phase liquid chromatography is used, with external standardization for quantification, to calculate the mass fraction of the disodium salt of 1-(4'-sulfophenyl)-3-carboxy-5-pyrazolone.

A.8.2 Reagents and Materials

- A.8.2.1 Disodium salt of 1-(4'-sulfophenyl)-3-carboxy-5-pyrazolone.
- A.8.2.2 Others are the same as in A.7.2.

A.8.3 Instruments and Equipment

Same as A.7.3.

A.8.4 Preparation of Sample Solution

Same as A.7.5.

A.8.5 Preparation of Standard Solutions

Weigh about 0.01 g (accurate to 0.0001 g) of the disodium salt of 1-(4'-sulfophenyl)-3-carboxy-5-pyrazolone previously dried in a vacuum desiccator for 24 h, dissolve with ammonium acetate solution, and dilute to volume to 100 mL. Pipette 10 mL of the above solution, add ammonium acetate solution to dilute to volume to 100 mL. Pipette 2.5 mL, 2.0 mL, and 1.0 mL respectively, and accurately dilute to volume with ammonium acetate solution to 100 mL to serve as a series of standard solutions.

A.8.6 Chromatographic Analysis Conditions

Same as A.7.4.

A.8.7 Analytical Procedure

Under the chromatographic conditions specified in A.8.6, inject the sample solution and series of standard solutions into the sample loop using a micro-syringe for chromatographic detection. After the last component elutes, process the results. Measure the peak areas of the disodium salt of 1-(4'-sulfophenyl)-3-carboxy-5-pyrazolone in the standard series to construct a standard curve, measure the peak area in the sample solution, and calculate its content from the standard curve. See Appendix D for the chromatogram.

A.9 Determination of Sodium Salt of 1-(4'-Sulfophenyl)-3-carbomethoxy (or carbethoxy)-5-pyrazolone

A.9.1 Summary of Method

Reverse-phase liquid chromatography is used, with external standardization for quantification, to calculate the mass fraction of the sodium salt of 1-(4'-sulfophenyl)-3-carbomethoxy (or carbethoxy)-5-pyrazolone.

A.9.2 Reagents and Materials

- A.9.2.1 Sodium salt of 1-(4'-sulfophenyl)-3-carbomethoxy (or carbethoxy)-5-pyrazolone.
- A.9.2.2 Others are the same as A.7.2.

A.9.3 Instruments and Equipment

Same as A.7.3.

A.9.4 Preparation of Sample Solution

Same as A.7.5.

A.9.5 Preparation of Standard Solutions

Weigh about 0.01 g (accurate to 0.0001 g) of the sodium salt of 1-(4'-sulfophenyl)-3-carbomethoxy (or carbethoxy)-5-pyrazolone previously dried in a vacuum desiccator for 24 h, dissolve with ammonium acetate solution, and dilute to volume to 100 mL. Pipette 10 mL of the above solution, add ammonium acetate solution, dilute to volume to 100 mL, and then pipette 10.0 mL, 5.0 mL, 2.0 mL, and 1.0 mL respectively, diluting to volume with ammonium acetate solution to 100 mL to serve as a series of standard solutions.

A.9.6 Chromatographic Analysis Conditions

Same as A.7.4.

A.9.7 Analytical Procedure

Under the conditions specified in A.9.6, inject the sample and standard solutions using a micro-syringe. After elution, measure peak areas, plot the standard curve, and calculate the content of the sodium salt of 1-(4'-sulfophenyl)-3-carbomethoxy (or carbethoxy)-5-pyrazolone in the sample. See Appendix D for the chromatogram.

A.10 Determination of Disodium Salt of 4,4'-(Diazoamino)dibenzenesulfonic Acid

A.10.1 Summary of Method

Reverse-phase liquid chromatography is used, with external standardization for quantification, to calculate the mass fraction of the disodium salt of 4,4'-(diazoamino)dibenzenesulfonic acid.

A.10.2 Reagents and Materials

- A.10.2.1 Disodium salt of 4,4'-(diazoamino)dibenzenesulfonic acid.
- A.10.2.2 Others are the same as A.7.2.

A.10.3 Instruments and Equipment

Same as A.7.3.

A.10.4 Preparation of Sample Solution

Same as A.7.5.

A.10.5 Preparation of Standard Solutions

Weigh about 0.01 g (accurate to 0.0001 g) of the disodium salt of 4,4'-(diazoamino) dibenzenesulfonic acid dried for 24 h in a vacuum desiccator, dissolve with ammonium acetate solution, and dilute to 100 mL. Pipette 10 mL of this solution, add ammonium acetate solution, dilute to 100 mL, then pipette 10.0 mL, 5.0 mL, 2.0 mL, and 1.0 mL respectively, and dilute to volume to 100 mL with ammonium acetate solution to form a series of standard solutions.

A.10.6 Chromatographic Analysis Conditions

- A.10.6.1 Detection wavelength: 358 nm.
- A.10.6.2 Others are the same as in A.7.4.

A.10.7 Analytical Procedure

Under the conditions specified in A.10.6, perform chromatographic detection by injecting the sample and series of standard solutions. Calculate the content of the disodium salt of 4,4'-(diazoamino)dibenzenesulfonic acid using the standard curve derived from peak areas. See Appendix D for the chromatogram.

A.11 Determination of Unsulfonated Primary Aromatic Amines (calculated as aniline)

A.11.1 Summary of Method

Extract unsulfonated primary aromatic amines from the sample using ethyl acetate, subject the extract and an aniline standard solution to diazotization and coupling respectively, and compare and determine their contents by measuring the absorbance of the resulting dyes.

A.11.2 Reagents and Materials

- A.11.2.1 Ethyl acetate.
- A.11.2.2 Hydrochloric acid solution: 1 + 10.
- A.11.2.3 Hydrochloric acid solution: 1 + 3.
- A.11.2.4 Potassium bromide solution: 500 g/L.
- A.11.2.5 Sodium carbonate solution: 200 g/L.
- A.11.2.6 Sodium hydroxide solution: 40 g/L.
- A.11.2.7 Sodium hydroxide solution: 4 g/L.
- A.11.2.8 R-salt solution: 20 g/L.
- A.11.2.9 Sodium nitrite solution: 3.52 g/L.
- A.11.2.10 Aniline standard solution: 0.1000 g/L.

- Preparation: Weigh 0.5000 g of freshly distilled aniline in a small beaker, transfer to a 500 mL volumetric flask, wash the beaker three times with 150 mL of hydrochloric acid solution (1 + 3), combine into the 500 mL volumetric flask, and dilute the mark with water. Pipette 25 mL of this solution into a 250 mL volumetric flask and dilute to volume with water. The aniline concentration of this solution is 0.1000 g/L.

A.11.3 Instruments and Equipment

- A.11.3.1 Visible spectrophotometer.
- A.11.3.2 Cuvette: 40 mm.

A.11.4 Preparation of Sample Extraction Solution

Weigh about 2 g of sample (accurate to 0.001 g) into a 150 mL beaker, add 100 mL of water and 5 mL of sodium hydroxide solution (40 g/L), and stir in a warm water bath until completely dissolved. Transfer this solution to a separatory funnel, washing the beaker with a small amount of water. Extract twice with 50 mL of ethyl acetate each time and combine the extracts. Wash the ethyl acetate extract with 10 mL of sodium hydroxide solution (4 g/L) to remove trace pigments. Then back-extract the ethyl acetate solution three times with 10 mL of hydrochloric acid solution (1 + 3) each time. Combine the hydrochloric acid extracts, dilute to 100 mL with water, and mix well. This solution serves as the sample extraction solution.

A.11.5 Preparation of Standard Comparison Solution

Pipette 2.0 mL of the aniline standard solution into a 100 mL volumetric flask, dilute to the mark with hydrochloric acid solution (1 + 10), and mix well. This serves as the standard comparison solution.

A.11.6 Preparation of Diazotized Coupling Solution

Pipette 10 mL of the sample extraction solution into a clean, transparent test tube, and immerse it in a beaker containing an ice-water mixture to cool for 10 min. Add 1 mL of potassium bromide solution and 0.5 mL of sodium nitrite solution to the test tube, shake vigorously, and keep cooling in the ice-water bath for 10 min for the diazotization reaction. Separately, take a 25 mL volumetric flask and add 1 mL of R-salt solution and 10 mL of sodium carbonate solution. Add the aniline diazonium salt solution from the test tube into the volumetric flask containing the R-salt solution while shaking slightly, rinse the test tube with a little water into the volumetric flask, and then dilute to volume with water. Mix thoroughly and let stand in the dark for 15 min. This solution is the sample diazotized coupling solution. For the preparation of the standard diazotized coupling solution, pipette 10 mL of the standard comparison solution and follow the same steps as above.

A.11.7 Preparation of Reference Solution

Pipette 10 mL of hydrochloric acid solution $(1 + 10)$, 10 mL of sodium carbonate solution, and 1 mL of R-salt solution into a 25 mL volumetric flask and dilute to volume with water. This solution serves as the reference solution.

A.11.8 Analytical Procedure

Place the standard diazotized coupling solution and the sample diazotized coupling solution into cuvettes respectively and measure their respective absorbance values A_s and A at a wavelength of 510 nm using a spectrophotometer, with A.11.7 as the reference solution.

A.11.9 Result Judgment

$A \leq A_s$ indicates compliance.

A.12 Determination of Subsidiary Dyes

A.12.1 Summary of Method

Separate the components by paper chromatography, elute them, and then quantify them spectrophotometrically.

A.12.2 Reagents and Materials

- A.12.2.1 Absolute ethanol.
- A.12.2.2 n-Butanol.
- A.12.2.3 Acetone solution: $1 + 1$.
- A.12.2.4 Ammonia solution: $4 + 96$.
- A.12.2.5 Sodium bicarbonate solution: 4 g/L.

A.12.3 Instruments and Equipment

- A.12.3.1 Spectrophotometer.
- A.12.3.2 Chromatographic filter paper: No. 1 medium speed, 150 mm $\times$ 250 mm.
- A.12.3.3 Chromatographic tank: 240 mm $\times$ 300 mm.
- A.12.3.4 Micro-injector: 100μL.
- A.12.3.5 Nessler colorimetric tube: 50 mL with glass ground stopper.
- A.12.3.6 Glass sintered funnel: G3, pore size 15μm to 40μm.
- A.12.3.7 50 mm cuvette.
- A.12.3.8 10 mm cuvette.

A.12.4 Analytical Procedure

A.12.4.1 Paper Chromatography Conditions

- A.12.4.1.1 Developing solvent: n-butanol + absolute ethanol + ammonia solution = $6 + 2 + 3$.

- A.12.4.1.2 Temperature: 20°C to 25°C.

A.12.4.2 Preparation of Sample Solution

Weigh about 1 g of sample (accurate to 0.001 g) into a beaker, add an appropriate amount of water to dissolve, transfer to a 100 mL volumetric flask, dilute to the mark, mix well, and set aside. The concentration of this sample solution is 1%.

A.12.4.3 Preparation of Sample Eluate

Use a micro-injector to draw 100μL of the sample solution and spot it evenly along a baseline located 25 mm from the bottom edge of the filter paper in a straight line, ensuring its width on the filter paper does not exceed 5 mm and its length is 130 mm. Dry it with a hair dryer. Place the filter paper into a chromatographic tank containing pre-prepared developing solvent. The bottom edge of the filter paper should be immersed 10 mm below the surface of the developing solvent. Wait until the solvent front rises to 150 mm or until the subsidiary dyes are satisfactorily separated. Take out the chromatographic filter paper and dry it with cool air. Run a blank filter paper under the same conditions; this blank filter paper should be cut from an adjacent portion of the same sheet of filter paper used for development in the above steps. The schematic diagram of paper chromatography for subsidiary dyes is shown in Figure A.2.

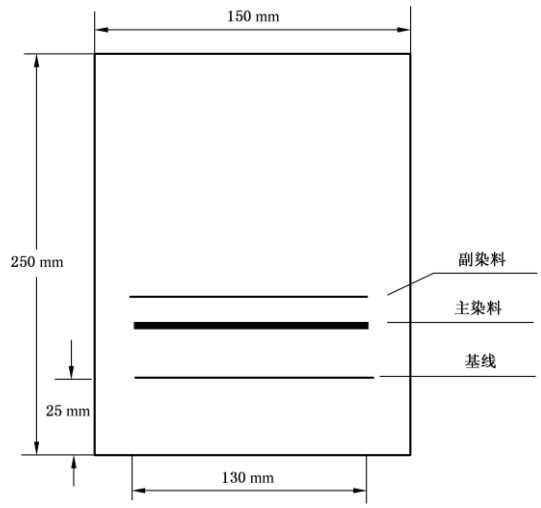

Figure A.2.

Cut out the respective subsidiary dyes obtained after development and the corresponding parts on the blank filter paper of the same size, and cut them into fine strips of about 5 mm × 15 mm. Place them into separate 50 mL Nessler colorimetric tubes, accurately add 5 mL of acetone solution, shake for 3 min to 5 min, then accurately add 20 mL of sodium bicarbonate solution, shake thoroughly, and naturally filter through G3 glass sintered funnels respectively. The filtrate should be clear with no suspended matter. The respective eluates of each subsidiary dye and the blank are obtained. Measure the respective absorbance values of each subsidiary dye eluate on a spectrophotometer at their respective maximum absorption wavelengths using a 50 mm cuvette.

When measuring the absorbance value on the spectrophotometer, use a mixture of 5 mL of acetone solution and 20 mL of sodium bicarbonate solution as the reference solution.

A.12.4.4 Preparation of Standard Solution

Pipette 2 mL of the 1% sample solution into a 100 mL volumetric flask, dilute to the mark, and mix well. This solution is the standard solution.

A.12.4.5 Preparation of Standard Eluate

Use a micro-injector to draw 100μL of the standard solution, spot it evenly on a baseline 25 mm from the bottom edge of the filter paper, and dry with a hair dryer. Place the filter paper into a chromatographic tank containing pre-prepared developing solvent. When the solvent front rises 40 mm, take it out, dry with cool air, cut out all the developed dye parts, and operate according to the method in A.12.4.3 to obtain the standard eluate. Measure the absorbance value at the maximum absorption wavelength using a 10 mm cuvette. At the same time, develop a blank filter paper under the same conditions, operate according to the same method, and measure the absorbance value of the blank eluate.

A.12.4.6 Calculation of Results

Subsidiary dyes, expressed as mass fraction (w_7), in %, are calculated according to formula (A.8):

$$w_7 = \frac{[(A_1 - b_1) + \cdots + (A_n - b_n)]/5}{(A_s - b_s)(100/2)} \times S$$

(A.8)

Where:

- $A_1 \ldots A_n$ — Absorbance values of each subsidiary dye eluate measured with a 50 mm optical path length;
- $b_1 \ldots b_n$ — Absorbance values of the corresponding blank eluates measured with a 50 mm optical path length;
- A_s — Absorbance value of the standard eluate measured with a 10 mm optical path length;
- b_s — Absorbance value of the standard blank eluate measured with a 10 mm optical path length;
- 5 — Conversion factor for the 10 mm optical path length;
- $100/2$ — Ratio conversion factor for the standard eluate to the 1% sample solution;
- S — Mass fraction of the sample, %.

The calculation result is expressed to one decimal place. The absolute difference between parallel measurement results shall not be greater than 0.2% (mass fraction), and the arithmetic means of the results is taken as the determination result.

A.13 Determination of Arsenic

A.13.1 Summary of Method

After wet digestion of tartrazine, a sample solution is prepared, and the arsenic content is determined by atomic absorption spectrometry.

A.13.2 Reagents and Materials

- A.13.2.1 Nitric acid.
- A.13.2.2 Sulfuric acid solution: 1 + 1.
- A.13.2.3 Nitric acid-perchloric acid mixed solution: 3 + 1.
- A.13.2.4 Arsenic (As) standard solution: Prepared and calibrated according to GB/T 602, then diluted according to instrument requirements to prepare three standard solutions containing corresponding concentrations of arsenic.
- A.13.2.5 Sodium hydroxide solution: 1 g/L.
- A.13.2.6 Sodium borohydride solution: 8 g/L (solvent is 1 g/L sodium hydroxide solution).
- A.13.2.7 Hydrochloric acid solution: 1 + 10.
- A.13.2.8 Potassium iodide solution: 200 g/L.

A.13.3 Instruments and Equipment

- A.13.3.1 Atomic absorption spectrometer.
- A.13.3.2 Instrument reference conditions: Arsenic hollow cathode lamp analysis line wavelength: 193.7 nm; slit: 0.5 nm to 1.0 nm; lamp current: 6 mA to 10 mA.
- A.13.3.3 Carrier gas flow rate: Argon 250 mL/min.
- A.13.3.4 Atomizer temperature: 900°C.

A.13.4 Analytical Procedure

A.13.4.1 Sample Digestion

Weigh about 1 g of sample (accurate to 0.001 g), place it in a 250 mL triangular or round-bottom flask, add 10 mL to 15 mL of nitric acid and 2 mL of sulfuric acid solution. Shake well and heat with a low flame to drive off nitrogen dioxide gas until the solution turns brown. Stop heating, allow it to cool, then add 5 mL of nitric acid-perchloric mixed solution. Heat with a strong flame until the solution is transparent or slightly yellow. If it is still not transparent, allow it to cool, add another 5 mL of nitric acid-perchloric mixed solution, and continue heating until the solution is transparent, colorless, or slightly yellow and white smoke appears (avoid charring due to dryness). Stop heating, allow it to cool, add 5 mL of water, and heat to boil to remove residual nitric acid-perchloric acid (if necessary, boil with water once more). Continue heating until white smoke is generated, and maintain for 10 min. After cooling, transfer to a 100 mL volumetric flask (if the solution is turbid, precipitated, or contains mechanical impurities, it should be filtered), and dilute to volume with hydrochloric acid solution. At the same time, prepare a blank solution using the same method.

A.13.4.2 Determination

Pipette 25 mL of the digested sample solution into a 50 mL volumetric flask, add 5 mL of potassium iodide solution, dilute to volume with hydrochloric acid solution, mix well, and let stand for 15 min. Simultaneously prepare a blank test solution using the blank solution in the same manner. Turn on the instrument. After the instrument and the arsenic hollow cathode lamp are fully preheated and the baseline is stable, use sodium borohydride solution as the hydride reduction generator. Inject samples sequentially following computer instructions: standard blank, standard solutions, sample blank test solution, and sample solution. After testing, the computer automatically generates the working curve and the arsenic concentration in the sample solution after subtracting the sample blank. Input sample information (such as name, sample mass, dilution volume, etc.), and the arsenic content in the sample will be automatically calculated. The absolute difference between parallel measurement results shall not be greater than 0.1 mg/kg, and the arithmetic mean of the results is taken as the determination result.

A.14 Determination of Lead

A.14.1 Summary of Method

After wet digestion of tartrazine, a sample solution is prepared, and the lead content is determined by atomic absorption spectrometry.

A.14.2 Reagents and Materials

- A.14.2.1 Lead (Pb) standard solution: Prepared and calibrated according to GB/T 602, then diluted according to instrument requirements into three standard solutions with corresponding lead concentrations.
- A.14.2.2 Sodium hydroxide solution: 1 g/L.
- A.14.2.3 Sodium borohydride solution: 8 g/L (solvent is 1 g/L sodium hydroxide solution).
- A.14.2.4 Hydrochloric acid solution: $1 + 10$.

A.14.3 Instruments and Equipment

- A.14.3.1 Atomic absorption spectrometer.
- A.14.3.2 Instrument reference conditions: Flame atomic absorption spectrometry, Method Three in GB 5009.12-2010.

A.14.4 Analytical Procedure

The sample solution and blank solution from A.13.4.1 can be used directly. Operate according to Method Three (Flame Atomic Absorption Spectrometry) in GB 5009.12-2010. The absolute difference between parallel measurement results shall not be greater than 1.0 mg/kg, and the arithmetic mean of the results is taken as the determination result.

A.15 Determination of Mercury

A.15.1 Summary of Method

After microwave or reflux digestion of tartrazine, a sample solution is prepared, and the mercury content is determined by atomic absorption spectrometry.

A.15.2 Reagents and Materials

- A.15.2.1 Mercury (Hg) standard solution: Prepared and calibrated according to GB/T 602, then diluted to prepare three standard solutions containing 0.5μg, 1μg, and 2μg of mercury per 1 mL.
- A.15.2.2 Nitric acid.
- A.15.2.3 Hydrogen peroxide.
- A.15.2.4 Sodium hydroxide solution: 1 g/L.
- A.15.2.5 Sodium borohydride solution: 8 g/L (solvent is 1 g/L sodium hydroxide solution).
- A.15.2.6 Hydrochloric acid solution: $1 + 10$.

A.15.3 Instruments and Equipment

- A.15.3.1 Atomic absorption spectrometer.
- A.15.3.2 Instrument reference conditions: Mercury hollow cathode lamp analysis line wavelength: 253.7 nm; slit: 0.5 nm; lamp current: 6 mA.
- A.15.3.3 Carrier gas flow rate: Argon 200 mL/min.
- A.15.3.4 Atomizer temperature: Room temperature.

A.15.4 Analytical Procedure

A.15.4.1 Microwave Digestion

Weigh about 0.1 g of sample (accurate to 0.001 g), place it in a digestion vessel, add 10 mL of nitric acid and 2 mL of hydrogen peroxide. After closing the safety valve, place the digestion vessel in a microwave oven. Raise the temperature to 130°C within 10 min, hold for 2 min, then raise to 150°C within 5 min, hold for 3 min, then raise to 180°C within 5 min, and hold for 10 min. After complete cooling, transfer the sample to a 25 mL volumetric flask (if turbid, precipitated, or containing mechanical impurities, filter it), and dilute it to volume with hydrochloric acid solution.

A.15.4.2 Reflux Digestion

Refer to the reflux digestion method in Method Two (Cold Atomic Absorption Spectrometry) of GB/T 5009.17-2003. Concurrently prepare a blank solution using the same method as a blank reference liquid.

A.15.4.3 Determination

Turn on the instrument. After the instrument and mercury hollow cathode lamp are fully preheated and the baseline is stable, use sodium borohydride solution as the hydride reduction generator. Inject samples sequentially following computer instructions: standard blank, standard solutions, sample blank, and sample solution. After testing, the computer automatically generates the working curve and the mercury concentration in the sample solution after subtracting the sample blank. Input sample information (such as name, sample mass, dilution volume, etc.), and the mercury content in the sample is automatically calculated. The absolute difference between parallel measurement results shall not be greater than 0.1 mg/kg, and the arithmetic mean of the results is taken as the determination result.

Appendix B

(Normative Appendix)

Preparation Method of Titanium Trichloride Standard Volumetric Solution

B.1 Reagents and Materials

- B.1.1 Hydrochloric acid.
- B.1.2 Ferrous ammonium sulfate.
- B.1.3 Ammonium thiocyanate solution: 200 g/L.
- B.1.4 Sulfuric acid solution: $1 + 1$.
- B.1.5 Ferric chloride solution.
- B.1.6 Potassium dichromate standard volumetric solution: $c(1/6K_2Cr_2O_7) = 0.1$ mol/L, prepared and calibrated according to GB/T 602.

B.2 Instruments and Equipment

See Figure A.1.

B.3 Preparation of Titanium Trichloride Standard Volumetric Solution

B.3.1 Preparation

Take 100 mL of ferric chloride solution and 75 mL of hydrochloric acid, place in a 1000 mL brown volumetric flask, dilute to the mark with water that has been boiled and cooled to room temperature, mix well, pour immediately into a light-protected lower-outlet bottle, and store under carbon dioxide gas protection.

B.3.2 Calibration

Weigh about 3 g (accurate to 0.0001 g) of ferrous ammonium sulfate, place in a 500 mL conical flask. Under the protection of a carbon dioxide gas stream, add 50 mL of boiled and cooled water to dissolve it, then add 25 mL of sulfuric acid solution. Continue passing a carbon dioxide gas stream below the liquid surface for protection, quickly and accurately add 35 mL of potassium dichromate standard volumetric solution, then titrate with the titanium trichloride standard

solution to be calibrated until close to the calculated endpoint. Immediately add 25 mL of ammonium thiocyanate solution and continue titrating with the titanium trichloride standard solution until the red color turns green, which is the endpoint. The entire titration process should be operated under carbon dioxide gas protection while conducting a blank test simultaneously.

B.3.3 Calculation of Results

The concentration of the titanium trichloride standard solution, expressed as $c(TiCl_3)$ in moles per liter (mol/L), is calculated according to formula (B.1):

$$c(TiCl_3) = \frac{c_3 V_4}{V_5 - V_6}$$

(B.1)

Where:

- c_3 — Exact concentration of the potassium dichromate standard volumetric solution, in moles per liter (mol/L);
- V_4 — Exact volume of potassium dichromate standard volumetric solution, in milliliters (mL);
- V_5 — Exact volume of titanium trichloride standard volumetric solution consumed to titrate the titanium oxidized by the potassium dichromate standard volumetric solution, in milliliters (mL);
- V_6 — Exact volume of titanium trichloride standard volumetric solution consumed in the blank titration, in milliliters (mL).

The calculation result is expressed to four decimal places. The above calibration must be performed immediately when analyzing samples.

Appendix C

(Normative Appendix)

Preparation Method of Barium Chloride Standard Solution

C.1 Reagents and Materials

- C.1.1 Barium chloride.
- C.1.2 Aqueous ammonia.
- C.1.3 Sulfuric acid standard volumetric solution: $c(1/2H_2SO_4) = 0.1$ mol/L, prepared and calibrated according to GB/T 601.
- C.1.4 Sodium rhodizonate indicator solution (weigh 0.1 g of sodium rhodizonate, dissolve in 10 mL of water, prepare before use).
- C.1.5 Broad-range pH test paper.

C.2 Preparation

Weigh 12.25 g of barium chloride, dissolve in 500 mL of water, transfer to a 1000 mL volumetric flask, dilute to the mark, and mix well.

C.3 Calibration Method

Pipette 20 mL of sulfuric acid standard volumetric solution into a 250 mL conical flask, add 50 mL of water, and neutralize with aqueous ammonia until broad-range pH test paper shows pH 8. Then titrate with the barium chloride standard volumetric solution, using sodium rhodizonate indicator solution as an external indicator. The endpoint is reached when the reaction liquid and indicator solution intersect on filter paper to form a rose-red spot that persists for 2 min without fading.

C.4 Calculation of Results

The concentration of the barium chloride standard volumetric solution, expressed as $c(1/2BaCl_2)$ in moles per liter (mol/L), is calculated according to formula (C.1):

$$c\left(\frac{1}{2}BaCl_2\right) = \frac{c_1 V_4}{V_5}$$

(C.1)

Where:

- c_1 — Exact concentration of the sulfuric acid standard volumetric solution, in moles per liter (mol/L);
- V_4 — Exact volume of the sulfuric acid standard volumetric solution, in milliliters (mL);
- V_5 — Exact volume of barium chloride standard volumetric solution consumed, in milliliters (mL).

The calculation result is expressed to four decimal places.

Appendix D

(Informative Appendix)

Schematic Diagram of Tartrazine Liquid Chromatography and Retention Times of Components

D.1 The schematic diagram of tartrazine liquid chromatography is shown in Figure D.1

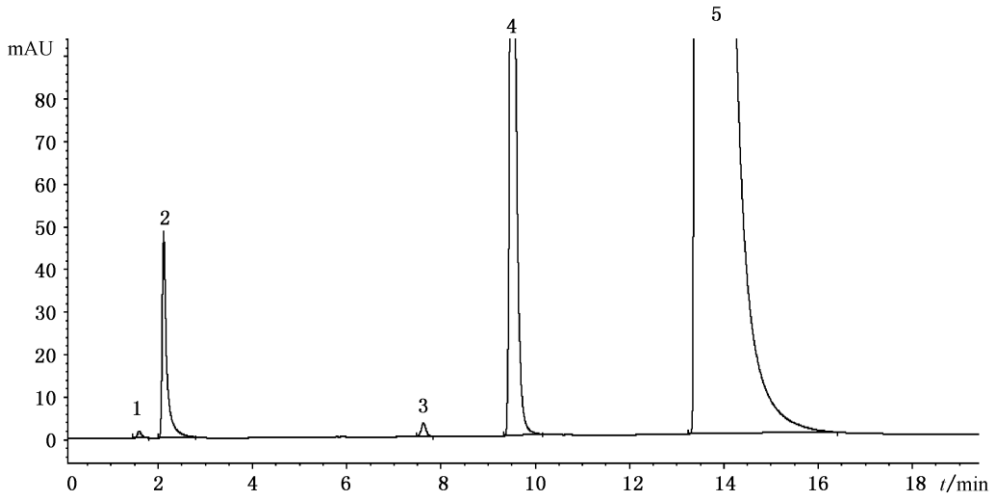

(Component identification corresponding to Figure D.1):

1. Disodium salt of 1-(4'-sulfophenyl)-3-carboxy-5-pyrazolone;
2. Sodium sulfanilate;
3. Unknown substance;
4. Sodium salt of 1-(4'-sulfophenyl)-3-carbomethoxy (or carbethoxy)-5-pyrazolone & Disodium salt of 4,4'-(diazoamino) dibenzenesulfonic acid;
5. Tartrazine.

D.2 The retention times of each component of tartrazine are shown in Table D.1

Table D.1 Retention Times of Tartrazine Components

Peak Number	**Component Name**	**Retention Time / min**
1	Disodium salt of 1-(4'-sulfophenyl)-3-carboxy-5-pyrazolone	1.58
2	Sodium sulfanilate	2.10
3	Unknown substance / 1-(4'-sulfophenyl)-3-carbomethoxy (or carbethoxy)-5-pyrazolone / 4,4'-(diazoamino) dibenzenesulfonic acid	7.50
4	Sodium salt of 1-(4'-sulfophenyl)-3-carbomethoxy (or carbethoxy)-5-pyrazolone / Disodium salt of 4,4'-(diazoamino)dibenzenesulfonic acid	9.50
5	Tartrazine	13.46

Note: Retention times of components may vary with different instruments, separation columns, and even injection times, but the elution order of each component remains unchanged.

END UNOFFICIAL TRANSLATION

9. Amendment to GB 6227.1-2010 National Food Safety Standard — Food Additive: Sunset Yellow

Modification Item

Add the following “note” to Table 2 under “4.2 Physicochemical Indices”

"Note: Commercialized liquid Sunset Yellow products shall use Sunset Yellow conforming to this standard as raw material, and may add food raw materials conforming to corresponding standards and/or food additives conforming to national food safety standards—such as benzoic acid and its sodium salt, sorbic acid and its potassium salt, propylene glycol, glycerin, propylene glycol alginate, tweens, sorbitol, sorbitol solution, ascorbic acid (vitamin C), tertiary butylhydroquinone (TBHQ), vitamin E—as well as thickeners and acidity regulators. The Sunset Yellow content and sensory requirements of commercialized products shall comply with the label claims. The total loss on drying, chlorides, and sulfates indices is not applicable to commercialized liquid products; all other indices shall comply with the provisions of this standard."

BEGIN UNOFFICIAL TRANSLATION

GB 6227.1-2010 National Food Safety Standard Food Additive — Sunset Yellow

Issued on: 2010-12-21

Implemented on: 2011-02-21

Published by the Ministry of Health of the People's Republic of China

Preface

This standard replaces GB 6227.1-1999 *Food Additive — Sunset Yellow*.

Compared with GB 6227.1-1999, the main changes in this standard are as follows:

- Safety warnings were added;
- The quality specification of ≥ 60.0% was removed, and the index of ≥ 85.0% was changed to ≥ 87.0%;
- The identification test method was modified;

- The allowable difference for parallel determinations in spectrophotometric colorimetry was changed from 2.0% to 1.0%;
- The indexes for loss on drying, total chlorides, and total sulfates were changed from ≤ 15.0% to ≤ 13.0%, and the test methods were modified;
- Indexes and test methods for unreacted intermediates—such as sodium sulfanilate, sodium 2-naphthol-6-sulfonate, disodium 6,6'-oxybis(2-naphthalenesulfonate), and disodium 4,4'-(diazoamino) dibenzenesulfonate—as well as 1-(phenylazo)-2-naphthol, were added;
- The index and test method for unsulfonated primary aromatic amines (calculated as aniline) were added;
- The test method for arsenic (As) was changed from the chemical limit test to atomic absorption spectrometry;
- The quality specification for heavy metals (calculated as Pb) was removed;
- The index and test method for lead (Pb) were added;
- The index and test method for mercury (Hg) were added.

Appendices A, B, and C of this standard are normative appendices, and Appendix D is an informative appendix. The previous versions of the standard replaced by this standard are:

- GB 6227.1-1986, GB 6227.1-1999.

1 Scope

This standard applies to the food additive Sunset Yellow, which is prepared by the diazotization of sulfanilic acid followed by coupling with Schaeffer's salt.

2 Normative References

The files referenced in this standard are indispensable for the application of this standard. For dated references, only the dated version applies to this standard. For undated references, the latest version (including all amendments) applies to this standard.

3 Chemical Name, Structural Formula, Molecular Formula, and Relative Molecular Mass

3.1 Chemical Name

Disodium 6-hydroxy-5-[(4-sulfophenyl)azo]-2-naphthalenesulfonate

3.2 Structural Formula

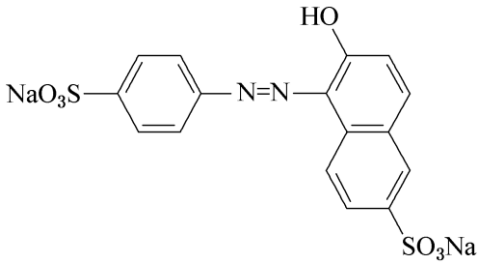

3.3 Molecular Formula

$$C_{16}H_{10}N_2Na_2O_7S_2$$

3.4 Relative Molecular Mass

452.37 (based on 2007 international relative atomic masses)

4 Technical Requirements

4.1 Sensory Requirements: Must comply with the provisions of Table 1

.

Table 1 Sensory Requirements

Item	Requirement	Test Method
Color	Orange-red	Visual evaluation under natural light
Texture/State	Powder or granules	

4.2 Physicochemical Indices: Must comply with the provisions of Table 2

Table 2 Physicochemical Indices

Item	Index	Test Method
Sunset Yellow (w), % ≥	87.0	Appendix A, A.4
Total loss on drying, chlorides (calculated as NaCl), and sulfates (calculated as Na_2SO_4), % ≤	13.0	Appendix A, A.5
Water-insoluble matter, % ≤	0.20	Appendix A, A.6

Item	Index	Test Method
Sodium sulfanilate (w), % ≤	0.20	Appendix A, A.7
Sodium 2-naphthol-6-sulfonate (w), % ≤	0.30	Appendix A, A.8
Disodium 6,6'-oxybis(2-naphthalenesulfonate) (w), % ≤	1.0	Appendix A, A.9
Disodium 4,4'-(diazoamino) dibenzenesulfonate, % ≤	0.10	Appendix A, A.10
1-(Phenylazo)-2-naphthol, (mg/kg) ≤	10.0	Appendix A, A.11
Unsulfonated primary aromatic amines (calculated as aniline), % ≤	0.01	Appendix A, A.12
Subsidiary dyes (w), % ≤	4.0	Appendix A, A.13
Arsenic (As), (mg/kg) ≤	1.0	Appendix A, A.14
Lead (Pb), (mg/kg) ≤	10.0	Appendix A, A.15
Mercury (Hg), (mg/kg) ≤	1.0	Appendix A, A.16

Appendix A

(Normative Appendix)

Test Methods

A.1 Safety Precautions

Some reagents used in the test methods of this standard are toxic or corrosive. Operations shall be carried out in accordance with relevant regulations, and caution must be exercised during operation. If splashed onto the skin, rinse immediately with water; seek medical treatment immediately for severe cases. Volatile acids must be handled inside a fume hood.

A.2 General Provisions

Unless other requirements are specified, the reagents and water used in this standard refer to analytical purity reagents and grade-three water specified in GB/T 6682-2008. Standard volumetric solutions, impurity standard solutions, preparations, and products required in the tests shall be prepared and calibrated in accordance with GB/T 601, GB/T 602, and GB/T 603, unless otherwise specified.

A.3 Identification Tests

A.3.1 Reagents and Materials

- A.3.1.1 Sulfuric acid.
- A.3.1.2 Ammonium acetate solution: 1.5 g/L.

A.3.2 Instruments and Equipment

- A.3.2.1 Spectrophotometer.
- A.3.2.2 Cuvette: 10 mm.

A.3.3 Identification Methods

The following conditions must be met:

- A.3.3.1 Weigh about 0.1 g of sample (accurate to 0.01g), dissolve in 100 mL of water, yielding an orange clear solution.
- A.3.3.2 Weigh about 0.1 g of sample (accurate to 0.01g), add 10 mL of sulfuric acid to yield an orange-red color. Add 2 to 3 drops of this solution into 5 mL of water to yield an orange-yellow color.
- A.3.3.3 Weigh about 0.1 g of sample (accurate to 0.01g), dissolve in 100 mL of ammonium acetate solution. Take 1 mL of this solution, add ammonium acetate solution to make 100 mL; the maximum absorption wavelength of this solution is 482 nm $\pm$ 2 nm.

A.4 Determination of Sunset Yellow

A.4.1 Titanium Trichloride Titration Method (Arbitration Method)

A.4.1.1 Summary of Method

In an acidic medium, the azo group in Sunset Yellow is reduced and decomposed by titanium trichloride. The content is calculated based on the consumption of the titanium trichloride standard volumetric solution.

A.4.1.2 Reagents and Materials

- A.4.1.2.1 Sodium hydrogen tartrate.

- A.4.1.2.2 Titanium trichloride standard volumetric solution: $c(\mathrm{TiCl_3}) = 0.1$ mol/L (prepare and use immediately; preparation method is detailed in Appendix B).
- A.4.1.2.3 Carbon dioxide in steel cylinders.

A.4.1.3 Instruments and Equipment

The setup diagram for the titanium trichloride titration method is shown in Figure A.1.

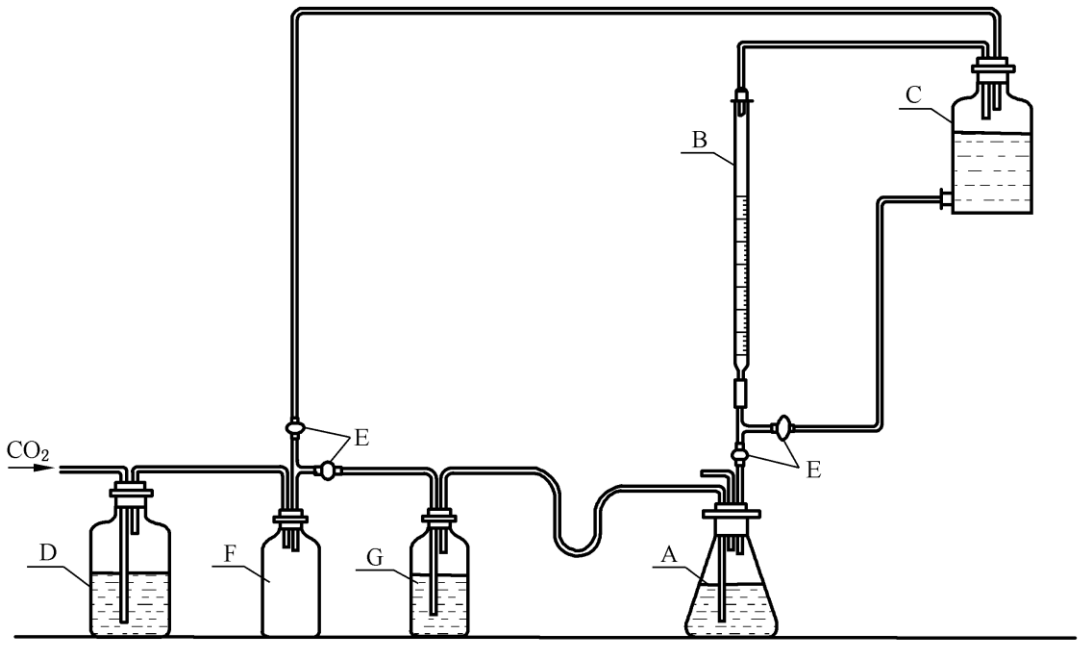

- A — Conical flask (500 mL);
- B — Brown burette (50 mL);
- C — Lower-outlet glass bottle wrapped with black paper (2000 mL);
- D — Container (5000 mL) filled with an equal volume mixture of 100 g/L ammonium carbonate solution and 100 g/L ferrous sulfate solution;
- E — Stopcock;
- F — Empty bottle;
- G — Gas-washing bottle filled with water.

A.4.1.4 Analytical Procedure

Weigh about 0.5 g of sample (accurate to 0.0001 g), place it in a 500 mL conical flask, dissolve in 50 mL of water that has been boiled and cooled to room temperature. Add 15 g of sodium hydrogen tartrate and 150 mL of boiling water. After shaking to dissolve, assemble the apparatus as shown in Figure A.1. Pass carbon dioxide beneath the liquid surface while heating to boiling and titrate with titanium trichloride standard volumetric solution until its intrinsic color disappears, which is the endpoint.

A.4.1.5 Calculation of Results

The mass fraction of Sunset Yellow, expressed as a percentage (%), is calculated according to formula (A.1):

$$w_1 = \frac{c(V/1000)(M/4)}{m_1} \times 100\%$$

(A.1)

Where:

- c — Exact concentration of the titanium trichloride standard volumetric solution, in moles per liter (mol/L);
- V — Exact volume of titanium trichloride standard volumetric solution consumed by titrating the sample, in milliliters (mL);
- M — Molar mass of Sunset Yellow, in grams per mole [$M(C_{16}H_{10}N_2Na_2O_7S_2) = 452.37$], in grams per mole (g/mol);
- m_1 — Numerical value of the sample mass, in grams (g).

The calculation result is expressed to one decimal place. The absolute difference between parallel measurement results shall not be greater than 1.0% (mass fraction), and the arithmetic mean of the results is taken as the determination result.

A.4.2 Spectrophotometric Colorimetry

A.4.2.1 Summary of Method

Dissolve the sample and a Sunset Yellow reference standard of known purity separately in water, dilute to volume with ammonium acetate solution, measure their absorbance values at the maximum absorption wavelength, and calculate the content.

A.4.2.2 Reagents and Materials

- A.4.2.2.1 Ammonium acetate solution: 1.5 g/L.
- A.4.2.2.2 Sunset Yellow reference standard: ≥ 87.0% (mass fraction, determined according to A.4.1).

A.4.2.3 Instruments and Equipment

- A.4.2.3.1 Spectrophotometer.
- A.4.2.3.2 Cuvette: 10 mm.

A.4.2.4 Preparation of Sunset Yellow Standard Solution

Weigh about 0.25 g of Sunset Yellow reference standard (accurate to 0.0001 g), dissolve in an appropriate amount of water, transfer to a 1000 mL volumetric flask, dilute to volume with water, and mix well. Pipette 10 mL into a 500 mL volumetric flask, dilute to volume with ammonium acetate solution, mix well, and set aside.

A.4.2.5 Preparation of Sunset Yellow Sample Solution

The weighing and operational methods are the same as those for the preparation of the standard solution in A.4.2.4.

A.4.2.6 Analytical Procedure

Place the Sunset Yellow standard solution and the Sunset Yellow sample solution into separate 10 mm cuvettes. Measure their respective absorbance values with a spectrophotometer at the maximum absorption wavelength, using the ammonium acetate solution as the reference liquid.

A.4.2.7 Calculation of Results

The mass fraction of Sunset Yellow, expressed as a percentage (%), is calculated according to formula (A.2):

$$w_1 = \frac{Am_0}{A_0 m} \times w_0$$

(A.2)

Where:

- A — Absorbance value of the Sunset Yellow sample solution;
- m_0 — Numerical value of the mass of the Sunset Yellow reference standard, in grams (g);
- A_0 — Absorbance value of the Sunset Yellow standard solution;
- m — Numerical value of the sample mass, in grams (g);
- w_0 — Mass fraction of the Sunset Yellow reference standard, %.

The calculation result is expressed to one decimal place. The absolute difference between parallel measurement results shall not be greater than 1.0% (mass fraction), and the arithmetic mean of the results is taken as the determination result.

A.5 Determination of Total Loss on Drying, Chlorides (calculated as NaCl), and Sulfates (calculated as Na_2SO_4)

A.5.1 Determination of Loss in Drying

A.5.1.1 Analytical Procedure

Weigh about 2 g of sample (accurate to 0.001 g), place it in a weighing bottle previously dried to constant mass in a $135°C \pm 2°C$ constant-temperature drying oven, and dry to constant mass in the $135°C \pm 2°C$ constant-temperature drying oven.

A.5.1.2 Calculation of Results

The mass fraction of loss on drying, denoted as w_2, expressed as a percentage (%), is calculated according to formula (A.3):

$$w_2 = \frac{m_2 - m_3}{m_2} \times 100\%$$

(A.3)

Where:

- m_2 — Numerical value of the sample mass before drying, in grams (g);
- m_3 — Numerical value of the sample mass after drying to constant mass, in grams (g).

The calculation result is expressed to one decimal place. The absolute difference between parallel measurement results shall not be greater than 0.2% (mass fraction), and the arithmetic means of the results is taken as the determination result.

A.5.2 Determination of Chlorides (calculated as NaCl)

A.5.2.1 Reagents and Materials

- A.5.2.1.1 Nitrobenzene.
- A.5.2.1.2 Activated carbon: 767 needle-type.
- A.5.2.1.3 Nitric acid solution: $1 + 1$.
- A.5.2.1.4 Silver nitrate solution: $c(\mathrm{AgNO_3}) = 0.1$ mol/L.
- A.5.2.1.5 Ferric ammonium sulfate solution: Weigh about 14 g of ferric ammonium sulfate, dissolve in 100 mL of water, filter, add 10 mL of nitric acid, and store in a brown bottle.
- A.5.2.1.6 Ammonium thiocyanate standard volumetric solution: $c(\mathrm{NH_4CNS}) =$ 0.1 mol/L.

A.5.2.2 Preparation of Sample Solution

Weigh about 2 g of sample (accurate to 0.001 g), dissolve in 150 mL of water, add about 15 g of activated carbon, gently boil for 2 min to 3 min, add 1 mL of nitric acid solution, shake continuously and evenly, and let stand for 30 min (shaking occasionally during this time). Filter through dry filter paper. If the filtrate is colored, add another 5 g of activated carbon, let stand for 1 h with occasional shaking, and filter again through dry filter paper (if still colored, replace the activated carbon and repeat the operation until the filtrate is colorless). Wash the activated carbon three times with 10 mL of water each time. Combine the filtrates and transfer to a 200 mL volumetric flask, add water to the mark, and mix well. This is used for the determination of chloride and sulfate contents.

A.5.2.3 Analytical Procedure

Pipette 50 mL of the sample solution into a 500 mL conical flask, add 2 mL of nitric acid solution, 10 mL of silver nitrate solution (add more if the chloride content is high), and 5 mL of

nitrobenzene. Shake vigorously until silver chloride coagulates. Add 1 mL of ferric ammonium sulfate solution, and titrate the excess silver nitrate with ammonium thiocyanate standard volumetric solution to the endpoint, maintaining it for 1 min. Meanwhile, perform a blank test in the same manner.

A.5.2.4 Calculation of Results

Chlorides (calculated as NaCl), expressed as mass fraction (w_3), in %, are calculated according to formula (A.4):

$$w_3 = \frac{c_1[(V_1 - V_0)/1000]M_1}{m_4(50/200)} \times 100\%$$

(A.4)

Where:

- c_1 — Exact concentration of the ammonium thiocyanate standard volumetric solution, in moles per liter (mol/L);
- V_1 — Exact volume of ammonium thiocyanate standard volumetric solution consumed in titrating the blank solution, in milliliters (mL);
- V_0 — Exact volume of ammonium thiocyanate standard volumetric solution consumed in titrating the sample solution, in milliliters (mL);
- M_1 — Molar mass of sodium chloride, in grams per mole [$M_1(\text{NaCl}) = 58.44$], in grams per mole (g/mol);
- m_4 — Numerical value of the sample mass, in grams (g).

The calculation result is expressed to one decimal place. The absolute difference between parallel measurement results shall not be greater than 0.3% (mass fraction), and the arithmetic mean of the results is taken as the determination result.

A.5.3 Determination of Sulfates (calculated as Na_2SO_4)

A.5.3.1 Reagents and Materials

- A.5.3.1.1 Sodium hydroxide solution: 2 g/L.
- A.5.3.1.2 Hydrochloric acid solution: $1 + 99$.
- A.5.3.1.3 Barium chloride standard volumetric solution: $c(1/2\text{BaCl}_2) = 0.1$ mol/L (preparation method detailed in Appendix C).
- A.5.3.1.4 Phenolphthalein indicator solution: 10 g/L.
- A.5.3.1.5 Sodium rhodizonate indicator solution: Weigh 0.1 g of sodium rhodizonate, dissolve in 10 mL of water (prepare before use).

A.5.3.2 Analytical Procedure

Pipette 25 mL of the sample solution (A.5.2.2) into a 250 mL conical flask, add 1 drop of phenolphthalein indicator solution, add sodium hydroxide solution dropwise until it turns pink,

and then add hydrochloric acid solution dropwise until the pink color disappears. Shake well, and while stirring continuously after dissolution, titrate with barium chloride standard volumetric solution using sodium rhodizonate indicator solution as an external indicator. The endpoint is reached when the reaction liquid and the indicator solution intersect on filter paper to form a rose-red spot that persists for 2 min without fading. At the same time, perform a blank test using the same method.

A.5.3.3 Calculation of Results

Sulfates (calculated as Na_2SO_4), expressed as mass fraction (w_4), in %, are calculated according to formula (A.5):

$$w_4 = \frac{c_2[(V_3 - V_2)/1000](M_2/2)}{m_4(25/200)} \times 100\%$$

(A.5)

Where:

- c_2 — Exact concentration of the barium chloride standard volumetric solution, in moles per liter (mol/L);
- V_3 — Exact volume of barium chloride standard volumetric solution consumed in titrating the sample solution, in milliliters (mL);
- V_2 — Exact volume of barium chloride standard volumetric solution consumed in titrating the blank solution, in milliliters (mL);
- M_2 — Numerical value of the molar mass of sodium sulfate, in grams per mole [$M_2(Na_2SO_4) = 142.04$], in grams per mole (g/mol);
- m_4 — Numerical value of the sample mass, in grams (g).

The calculation result is expressed to one decimal place. The absolute difference between parallel measurement results shall not be greater than 0.2% (mass fraction), and the arithmetic means of the results are taken as the determination result.

A.5.4 Calculation of Total Results for Loss on Drying, Chlorides (calculated as NaCl), and Sulfates (calculated as Na_2SO_4)

The total mass fraction of loss on drying, chlorides (calculated as NaCl), and sulfates (calculated as Na_2SO_4), denoted as w_5, expressed in %, is calculated according to formula (A.6):

$$w_5 = w_2 + w_3 + w_4$$

(A.6)

Where:

- w_2 — Mass fraction of loss on drying, %;
- w_3 — Mass fraction of chlorides (calculated as NaCl), %;
- w_4 — Mass fraction of sulfates (calculated as Na_2SO_4), %.

The calculation result is expressed to one decimal place.

A.6 Determination of Water-Insoluble Matter

A.6.1 Instruments and Equipment

- A.6.1.1 Glass sintered crucible: G4, pore size 5μm to 15μm.
- A.6.1.2 Constant-temperature drying oven.

A.6.2 Analytical Procedure

Weigh about 3 g of sample (accurate to 0.001 g), place it in a 500 mL beaker, add 250 mL of hot water at 50°C to 60°C to dissolve it. Filter through a G4 glass sintered crucible previously dried to constant mass at $135^{\circ}\text{C} \pm 2^{\circ}\text{C}$, wash thoroughly with hot water until the filtrate is colorless, and dry to constant mass in a constant-temperature drying oven at $135^{\circ}\text{C} \pm 2^{\circ}\text{C}$.

A.6.3 Calculation of Results

Water-insoluble matter, expressed as mass fraction w_6, in %, is calculated according to formula (A.7):

$$w_6 = \frac{m_6}{m_5} \times 100\%$$

(A.7)

Where:

- m_6 — Numerical value of the mass of water-insoluble matter after drying, in grams (g);
- m_5 — Numerical value of the sample mass, in grams (g).

The calculation result is expressed to two decimal places. The absolute difference between parallel measurement results shall not be greater than 0.05% (mass fraction), and the arithmetic mean of the results is taken as the determination result.

A.7 Determination of Sodium Sulfanilate

A.7.1 Summary of Method

Reverse-phase liquid chromatography is used, with external standardization for quantification, to calculate the mass fraction of sodium sulfanilate.

A.7.2 Reagents and Materials

- A.7.2.1 Methanol.
- A.7.2.2 Sodium sulfanilate.
- A.7.2.3 Ammonium acetate solution: 2 g/L.

A.7.3 Instruments and Equipment

- A.7.3.1 High-performance liquid chromatograph: Infusion pump flow rate range 0.1 mL/min to 5.0 mL/min, flow rate stability within this range is $\pm 1\%$; detector — multi-wavelength ultraviolet spectrophotometric detector or UV spectrophotometric detector with equivalent performance.
- A.7.3.2 Chromatographic column: Stainless steel column, length 150 mm, internal diameter 4.6 mm, stationary phase is C_{18}, particle size 5μm.
- A.7.3.3 Chromatographic workstation or integrator.
- A.7.3.4 Ultrasonic generator.
- A.7.3.5 Sample loop: 20μL.
- A.7.3.6 Micro-syringe: 20μL to 100μL.

A.7.4 Chromatographic Analysis Conditions

- A.7.4.1 Detection wavelength: 254 nm.
- A.7.4.2 Column temperature: 40°C.
- A.7.4.3 Mobile phase: A, ammonium acetate solution; B, methanol;
    - Concentration gradient: 40 min linear concentration gradient from A(95):B(5) to A(50): B(50).
- A.7.4.4 Flow rate: 1 mL/min.
- A.7.4.5 Injection volume: 20μL.
    - Note: Optimal analytical conditions may be selected according to different instruments. The mobile phase should be mixed well and degassed using an ultrasonic generator.

A.7.5 Preparation of Sample Solution

Weigh about 0.1 g of sample (accurate to 0.0001 g), add ammonium acetate solution to dissolve, and dilute to 100 mL. This is the sample solution.

A.7.6 Preparation of Standard Solutions

Weigh about 0.01 g (accurate to 0.0001 g) of sodium sulfanilate previously dried in a vacuum desiccator for 24 h, dissolve with ammonium acetate solution, and dilute to 100 mL. Pipette 10 mL of the above solution, add ammonium acetate solution to dilute to 100 mL, and then pipette 2.5 mL, 2.0 mL, and 1.0 mL of this solution respectively, and dilute to volume with ammonium acetate solution to 100 mL to serve as a series of standard solutions.

A.7.7 Analytical Procedure

Under the chromatographic conditions specified in A.7.4, use a micro-syringe to draw the sample solution and each of the series of standard solutions, inject and fill the sample loop for chromatographic detection. After the elution of the last component is complete, process the results. Measure the peak areas of sodium sulfanilate in the series of standard solutions to plot a standard curve. Measure the peak area of sodium sulfanilate in the sample solution and calculate

the content of sodium sulfanilate based on the standard curve. See Appendix D for the chromatogram.

A.8 Determination of Sodium 2-Naphthol-6-sulfonate

A.8.1 Summary of Method

Reverse-phase liquid chromatography is used, with external standardization for quantification, to calculate the mass fraction of sodium 2-naphthol-6-sulfonate.

A.8.2 Reagents and Materials

- A.8.2.1 Sodium 2-naphthol-6-sulfonate.
- A.8.2.2 Others are the same as in A.7.2.

A.8.3 Instruments and Equipment

Same as A.7.3.

A.8.4 Preparation of Sample Solution

Same as A.7.5.

A.8.5 Preparation of Standard Solutions

Weigh about 0.01 g (accurate to 0.0001 g) of sodium 2-naphthol-6-sulfonate previously dried in a vacuum desiccator for 24 h, dissolve with ammonium acetate solution, and dilute to volume to 100 mL. Pipette 10 mL of the above solution, add ammonium acetate solution to dilute to volume to 100 mL. Pipette 2.5 mL, 2.0 mL, and 1.0 mL respectively, and accurately dilute to volume with ammonium acetate solution to 100 mL to serve as a series of standard solutions.

A.8.6 Chromatographic Analysis Conditions

Same as A.7.4.

A.8.7 Analytical Procedure

Under the chromatographic conditions specified in A.8.6, inject the sample solution and series of standard solutions into the sample loop using a micro-syringe for chromatographic detection. After the last component elutes, process the results. Measure the peak areas of sodium 2-naphthol-6-sulfonate in the standard series to construct a standard curve, measure the peak area in the sample solution, and calculate its content from the standard curve. See Appendix D for the chromatogram.

A.9 Determination of Disodium 6,6'-Oxybis(2-naphthalenesulfonate)

A.9.1 Summary of Method

Reverse-phase liquid chromatography is used, with external standardization for quantification, to calculate the mass fraction of disodium 6,6'-oxybis(2-naphthalenesulfonate).

A.9.2 Reagents and Solutions

- A.9.2.1 Disodium 6,6'-oxybis(2-naphthalenesulfonate).
- A.9.2.2 Others are the same as A.7.2.

A.9.3 Instruments and Equipment

Same as A.7.3.

A.9.4 Preparation of Sample Solution

Same as A.7.5.

A.9.5 Preparation of Standard Solutions

Weigh about 0.01 g (accurate to 0.0001 g) of disodium 6,6'-oxybis(2-naphthalenesulfonate) previously dried in a vacuum desiccator for 24 h, dissolve with ammonium acetate solution, and dilute to volume to 100 mL. Pipette 10 mL of the above solution, add ammonium acetate solution, dilute to volume to 100 mL, and then pipette 10.0 mL, 5.0 mL, 2.0 mL, and 1.0 mL respectively, diluting to volume with ammonium acetate solution to 100 mL to serve as a series of standard solutions.

A.9.6 Chromatographic Analysis Conditions

Same as A.7.4.

A.9.7 Analytical Procedure

Under the conditions specified in A.9.6, inject the sample and standard solutions using a micro-syringe. After elution, measure peak areas, plot the standard curve, and calculate the content of disodium 6,6'-oxybis(2-naphthalenesulfonate) in the sample. See Appendix D for the chromatogram.

A.10 Determination of Disodium Salt of 4,4'-(Diazoamino) dibenzenesulfonic Acid

A.10.1 Summary of Method

Reverse-phase liquid chromatography is used, with external standardization for quantification, to calculate the mass fraction of the disodium salt of 4,4'-(diazoamino) dibenzenesulfonic acid.

A.10.2 Reagents and Materials

- A.10.2.1 Disodium salt of 4,4'-(diazoamino) dibenzenesulfonic acid.
- A.10.2.2 Others are the same as A.7.2.

A.10.3 Instruments and Equipment

Same as A.7.3.

A.10.4 Preparation of Sample Solution

Same as A.7.5.

A.10.5 Preparation of Standard Solutions

Weigh about 0.01 g (accurate to 0.0001 g) of the disodium salt of 4,4'-(diazoamino) dibenzenesulfonic acid dried for 24 h in a vacuum desiccator, dissolve with ammonium acetate solution, and dilute to 100 mL. Pipette 10 mL of this solution, add ammonium acetate solution, dilute to 100 mL, then pipette 10.0 mL, 5.0 mL, 2.0 mL, and 1.0 mL respectively, and dilute to volume to 100 mL with ammonium acetate solution to form a series of standard solutions.

A.10.6 Chromatographic Analysis Conditions

- A.10.6.1 Detection wavelength: 358 nm.
- A.10.6.2 Others are the same as in A.7.4.

A.10.7 Analytical Procedure

Under the conditions specified in A.10.6, perform chromatographic detection by injecting the sample and series of standard solutions. Calculate the content of the disodium salt of 4,4'-(diazoamino) dibenzenesulfonic acid using the standard curve derived from peak areas. See Appendix D for the chromatogram.

A.11 Determination of 1-(Phenylazo)-2-naphthol

A.11.1 Summary of Method

Reverse-phase liquid chromatography is used, with external standardization for quantification, to calculate the mass fraction of 1-(phenylazo)-2-naphthol.

A.11.2 Reagents and Materials

- A.11.2.1 1-(Phenylazo)-2-naphthol.
- A.11.2.2 Mixture of methanol and 2 g/L ammonium acetate solution: 1 + 1.
- A.11.2.3 Others are the same as in A.7.2.

A.11.3 Instruments and Equipment

Same as A.7.3.

A.11.4 Preparation of Sample Solution

Same as A.7.5.

A.11.5 Preparation of Standard Solutions

Weigh about 0.01 g (accurate to 0.0001 g) of 1-(phenylazo)-2-naphthol previously dried in a vacuum desiccator for 24 h. Dissolve with methanol, transfer to a 1000 mL volumetric flask, and dilute to volume with the mixture of methanol and 2 g/L ammonium acetate solution. Pipette 10 mL of the above solution, dilute to volume to 1000 mL with the mixture of methanol and 2 g/L ammonium acetate solution, and then pipette 2.0 mL, 1.0 mL, and 0.5 mL respectively, diluting to volume to 100 mL with the mixture of methanol and 2 g/L ammonium acetate solution to serve as a series of standard solutions.

A.11.6 Chromatographic Analysis Conditions

- A.11.6.1 Detection wavelength: 382 nm.
- A.11.6.2 Concentration gradient: 50 min linear concentration gradient from A(80):B(20) to A (10): B (90).
- A.11.6.3 Others are the same as in A.7.4.

A.11.7 Analytical Procedure

Under the conditions specified in A.11.6, inject the sample and standard solutions using a micro-syringe for chromatographic detection. Measure peak areas, plot the standard curve, and calculate the content of 1-(phenylazo)-2-naphthol in the sample. See Appendix D for the chromatogram.

A.12 Determination of Unsulfonated Primary Aromatic Amines (calculated as aniline)

A.12.1 Summary of Method

Extract unsulfonated primary aromatic amines from the sample using ethyl acetate, subject the extract and an aniline standard solution to diazotization and coupling respectively, and compare and determine their contents by measuring the absorbance of the resulting dyes.

A.12.2 Reagents and Materials

- A.12.2.1 Ethyl acetate.
- A.12.2.2 Hydrochloric acid solution: 1 + 10.
- A.12.2.3 Hydrochloric acid solution: 1 + 3.
- A.12.2.4 Potassium bromide solution: 500 g/L.
- A.12.2.5 Sodium carbonate solution: 200 g/L.
- A.12.2.6 Sodium hydroxide solution: 40 g/L.

- A.12.2.7 Sodium hydroxide solution: 4 g/L.
- A.12.2.8 R-salt solution: 20 g/L.
- A.12.2.9 Sodium nitrite solution: 3.52 g/L.
- A.12.2.10 Aniline standard solution: 0.1000 g/L.
    - Preparation: Weigh 0.5000 g of freshly distilled aniline in a small beaker, transfer to a 500 mL volumetric flask, wash the beaker three times with 150 mL of hydrochloric acid solution (1 + 3), combine into the 500 mL volumetric flask, and dilute the mark with water. Pipette 25 mL of this solution into a 250 mL volumetric flask and dilute to volume with water. The aniline concentration of this solution is 0.1000 g/L.

A.12.3 Instruments and Equipment

- A.12.3.1 Visible spectrophotometer.
- A.12.3.2 40 mm cuvette.

A.12.4 Preparation of Sample Extraction Solution

Weigh about 2.0 g of sample (accurate to 0.001 g) into a 150 mL beaker, add 100 mL of water and 5 mL of sodium hydroxide solution (40 g/L), and stir in a warm water bath until completely dissolved. Transfer this solution to a separatory funnel, washing the beaker with a small amount of water. Extract twice with 50 mL of ethyl acetate each time and combine the extracts. Wash the ethyl acetate extract with 10 mL of sodium hydroxide solution (4 g/L) to remove trace pigments. Then back-extract the ethyl acetate solution three times with 10 mL of hydrochloric acid solution (1 + 3) each time. Combine the hydrochloric acid extracts, dilute to 100 mL with water, and mix well. This solution serves as the sample extraction solution.

A.12.5 Preparation of Standard Comparison Solution

Pipette 2.0 mL of the aniline standard solution into a 100 mL volumetric flask, dilute to the mark with hydrochloric acid solution (1 + 10), and mix well. This serves as the standard comparison solution.

A.12.6 Preparation of Diazotized Coupling Solution

Pipette 10 mL of the sample extraction solution into a clean, transparent test tube, and immerse it in a beaker containing an ice-water mixture to cool for 10 min. Add 1 mL of potassium bromide solution and 0.5 mL of sodium nitrite solution to the test tube, shake vigorously, and keep cooling in the ice-water bath for 10 min for the diazotization reaction. Separately, take a 25 mL volumetric flask and add 1 mL of R-salt solution and 10 mL of sodium carbonate solution. Add the aniline diazonium salt solution from the test tube into the volumetric flask containing the R-salt solution while shaking slightly, rinse the test tube with a little water into the volumetric flask, and then dilute to volume with water. Mix thoroughly and let stand in the dark for 15 min. This solution is the sample diazotized coupling solution. For the preparation of the standard diazotized coupling solution, pipette 10 mL of the standard comparison solution and follow the same steps as above.

A.12.7 Preparation of Reference Solution

Pipette 10 mL of hydrochloric acid solution $(1 + 10)$, 10 mL of sodium carbonate solution, and 1 mL of R-salt solution into a 25 mL volumetric flask and dilute to volume with water. This solution serves as the reference solution.

A.12.8 Analytical Procedure

Place the standard diazotized coupling solution and the sample diazotized coupling solution into cuvettes respectively and measure their respective absorbance values A_s and A at a wavelength of 510 nm using a spectrophotometer, with A.12.7 as the reference solution.

A.12.9 Result Judgment

$A \leq A_s$ indicates compliance.

A.13 Determination of Subsidiary Dyes

A.13.1 Summary of Method

Separate the components by paper chromatography, elute them, and then quantify them spectrophotometrically.

A.13.2 Reagents and Materials

- A.13.2.1 Absolute ethanol.
- A.13.2.2 n-Butanol.
- A.13.2.3 Acetone solution: $1 + 1$.
- A.13.2.4 Ammonia solution: $4 + 96$.
- A.13.2.5 Sodium bicarbonate solution: 4 g/L.

A.13.3 Instruments and Equipment

- A.13.3.1 Spectrophotometer.
- A.13.3.2 Chromatographic filter paper: No. 1 medium speed, 150 mm $\times$ 250 mm.
- A.13.3.3 Chromatographic tank: 240 mm $\times$ 300 mm.
- A.13.3.4 Micro-injector: 100μL.
- A.13.3.5 Nessler colorimetric tube: 50 mL with glass ground stopper.
- A.13.3.6 Glass sintered funnel: G3, pore size 15μm to 40μm.
- A.13.3.7 50 mm cuvette.
- A.13.3.8 10 mm cuvette.

A.13.4 Analytical Procedure

A.13.4.1 Paper Chromatography Conditions

- A.13.4.1.1 Developing solvent: n-butanol + absolute ethanol + ammonia solution = 6 + 2 + 3.
- A.13.4.1.2 Temperature: 20°C to 25°C.

A.13.4.2 Preparation of Sample Solution

Weigh about 1 g of sample (accurate to 0.001 g) into a beaker, add an appropriate amount of water to dissolve, transfer to a 100 mL volumetric flask, dilute to the mark, mix well, and set aside. The concentration of this sample solution is 1%.

A.13.4.3 Preparation of Sample Eluate

Use a micro-injector to draw 100μL of the sample solution and spot it evenly along a baseline located 25 mm from the bottom edge of the filter paper in a straight line, ensuring its width on the filter paper does not exceed 5 mm and its length is 130 mm. Dry it with a hair dryer. Place the filter paper into a chromatographic tank containing prepared developing solvent. The bottom edge of the filter paper should be immersed 10 mm below the surface of the developing solvent. Wait until the solvent front rises to 150 mm or until the subsidiary dyes are satisfactorily separated. Take out the chromatographic filter paper and dry it with cool air. Run a blank filter paper under the same conditions; this blank filter paper should be cut from an adjacent portion of the same sheet of filter paper used for development in the above steps. The schematic diagram of paper chromatography for subsidiary dyes is shown in Figure A.2.

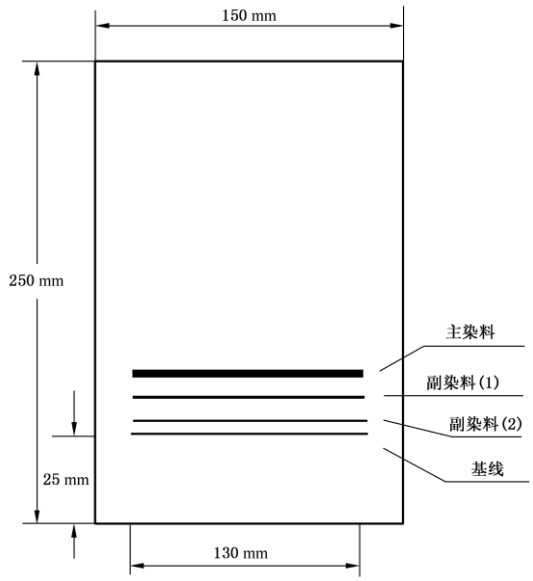

Cut out the respective subsidiary dyes obtained after development and the corresponding parts on the blank filter paper of the same size, and cut them into fine strips of about 5 mm × 15 mm. Place them into separate 50 mL Nessler colorimetric tubes, accurately add 5 mL of acetone solution, shake for 3 min to 5 min, then accurately add 20 mL of sodium bicarbonate solution, shake thoroughly, and naturally filter through G3 glass sintered funnels respectively. The filtrate should be clear with no suspended matter. The respective eluates of each subsidiary dye and the

blank are obtained. Measure the respective absorbance values of each subsidiary dye eluate on a spectrophotometer at their respective maximum absorption wavelengths using a 50 mm cuvette. When measuring the absorbance on the spectrophotometer, use a mixture of 5 mL of acetone solution and 20 mL of sodium bicarbonate solution as the reference solution.

A.13.4.4 Preparation of Standard Solution

Pipette 2 mL of the sample solution into a 100 mL volumetric flask, dilute to the mark, and mix well. This solution is the standard solution.

A.13.4.5 Preparation of Standard Eluate

Use a micro-injector to draw 100μL of the standard solution, spot it evenly on a baseline 25 mm from the bottom edge of the filter paper, and dry with a hair dryer. Place the filter paper into a chromatographic tank containing pre-prepared developing solvent. When the solvent front rises 40 mm, take it out, dry with cool air, cut out all the developed dye parts, and operate according to the method in A.13.4.3 to obtain the standard eluate. Measure the absorbance value at the maximum absorption wavelength using a 10 mm cuvette. At the same time, develop a blank filter paper under the same conditions, operate according to the same method, and measure the absorbance value of the blank eluate.

A.13.4.6 Calculation of Results

Subsidiary dyes, expressed as mass fraction (w_7), in %, are calculated according to formula (A.8):

$$w_7 = \frac{[(A_1 - b_1) + \cdots + (A_n - b_n)]/5}{(A_s - b_s)(100/2)} \times S$$

(A.8)

Where:

- $A_1 \ldots A_n$ — Absorbance values of each subsidiary dye eluate measured with a 50 mm optical path length;
- $b_1 \ldots b_n$ — Absorbance values of the corresponding blank eluates measured with a 50 mm optical path length;
- A_s — Absorbance value of the standard eluate measured with a 10 mm optical path length;
- b_s — Absorbance value of the standard blank eluate measured with a 10 mm optical path length;
- 5 — Conversion factor for the 10 mm optical path length;
- $100/2$ — Ratio conversion factor for the standard eluate to the 1% sample solution;
- S — Mass fraction of the sample, %.

The calculation result is expressed to one decimal place. The absolute difference between parallel measurement results shall not be greater than 0.2% (mass fraction), and the arithmetic means of the results are taken as the determination result.

A.14 Determination of Arsenic

A.14.1 Summary of Method

After wet digestion of Sunset Yellow, a sample solution is prepared, and the arsenic content is determined by atomic absorption spectrometry.

A.14.2 Reagents and Materials

- A.14.2.1 Nitric acid.
- A.14.2.2 Sulfuric acid solution: 1 + 1.
- A.14.2.3 Nitric acid-perchloric acid mixed solution: 3 + 1.
- A.14.2.4 Arsenic (As) standard solution: Prepared and calibrated according to GB/T 602, then diluted according to instrument requirements to prepare three standard solutions containing corresponding concentrations of arsenic.
- A.14.2.5 Sodium hydroxide solution: 1 g/L.
- A.14.2.6 Sodium borohydride solution: 8 g/L (solvent is 1 g/L sodium hydroxide solution).
- A.14.2.7 Hydrochloric acid solution: 1 + 10.
- A.14.2.8 Potassium iodide solution: 200 g/L.

A.14.3 Instruments and Equipment

- A.14.3.1 Atomic absorption spectrometer.
- A.14.3.2 Instrument reference conditions: Arsenic hollow cathode lamp analysis line wavelength: 193.7 nm; slit: 0.5 nm to 1.0 nm; current lamp: 6 mA to 10 mA.
- A.14.3.3 Carrier gas flow rate: Argon 250 mL/min.
- A.14.3.4 Atomizer temperature: 900°C.

A.14.4 Analytical Procedure

A.14.4.1 Sample Digestion

Weigh about 1 g of sample (accurate to 0.001 g), place it in a 250 mL triangular or round-bottom flask, add 10 mL to 15 mL of nitric acid and 2 mL of sulfuric acid solution. Shake well and heat with a low flame to drive off nitrogen dioxide gas until the solution turns brown. Stop heating, allow it to cool, then add 5 mL of nitric acid-perchloric mixed solution. Heat with a strong flame until the solution is transparent or slightly yellow. If it is still not transparent, allow it to cool, add another 5 mL of nitric acid-perchloric mixed solution, and continue heating until the solution is transparent, colorless, or slightly yellow and white smoke appears (avoid charring due to dryness). Stop heating, allow it to cool, add 5 mL of water, and heat it to boil to remove residual nitric acid-perchloric acid (if necessary, boil with water once more). Continue heating until white

smoke is generated, and maintain for 10 min. After cooling, transfer to a 100 mL volumetric flask (if the solution is turbid, precipitated, or contains mechanical impurities, it should be filtered), and dilute to volume with hydrochloric acid solution. At the same time, prepare a blank solution using the same method.

A.14.4.2 Determination

Pipette 25 mL of the digested sample solution into a 50 mL volumetric flask, add 5 mL of potassium iodide solution, dilute to volume with hydrochloric acid solution, mix well, and let stand for 15 min. Simultaneously prepare a blank test solution using the blank solution in the same manner. Turn on the instrument. After the instrument and the arsenic hollow cathode lamp are fully preheated and the baseline is stable, use sodium borohydride solution as the hydride reduction generator. Inject samples sequentially following computer instructions: standard blank, standard solutions, sample blank test solution, and sample solution. After testing, the computer automatically generates the working curve and the arsenic concentration in the sample solution after subtracting the sample blank. Input sample information (such as name, sample mass, dilution volume, etc.), and the arsenic content in the sample will be automatically calculated. The absolute difference between parallel measurement results shall not be greater than 0.1 mg/kg, and the arithmetic mean of the results is taken as the determination result. *(Note: "mg/kg" implied from standard limit text).*

A.15 Determination of Lead

A.15.1 Summary of Method

After wet digestion of Sunset Yellow, a sample solution is prepared, and the lead content is determined by atomic absorption spectrometry.

A.15.2 Reagents and Materials

- A.15.2.1 Lead (Pb) standard solution: Prepared and calibrated according to GB/T 602, then diluted according to instrument requirements into three standard solutions with corresponding lead concentrations.
- A.15.2.2 Sodium hydroxide solution: 1 g/L.
- A.15.2.3 Sodium borohydride solution: 8 g/L (solvent is 1 g/L sodium hydroxide solution).
- A.15.2.4 Hydrochloric acid solution: $1 + 10$.

A.15.3 Instruments and Equipment

- A.15.3.1 Atomic absorption spectrometer.
- A.15.3.2 Instrument reference conditions: Flame atomic absorption spectrometry, Method Three in GB 5009.12-2010.

A.15.4 Analytical Procedure

The sample solution and blank solution from A.14.4.1 can be used directly. Operate according to Method Three (Flame Atomic Absorption Spectrometry) in GB 5009.12-2010. The absolute difference between parallel measurement results shall not be greater than 1.0 mg/kg, and the arithmetic mean of the results is taken as the determination result.

A.16 Determination of Mercury

A.16.1 Summary of Method

After microwave or reflux digestion of Sunset Yellow, a sample solution is prepared, and the mercury content is determined by atomic absorption spectrometry.

A.16.2 Reagents and Materials

- A.16.2.1 Mercury (Hg) standard solution: Prepared and calibrated according to GB/T 602, then diluted to prepare three standard solutions containing 0.5μg, 1μg, and 2μg of mercury per 1 mL.
- A.16.2.2 Nitric acid.
- A.16.2.3 Hydrogen peroxide.
- A.16.2.4 Sodium hydroxide solution: 1 g/L.
- A.16.2.5 Sodium borohydride solution: 8 g/L (solvent is 1 g/L sodium hydroxide solution).
- A.16.2.6 Hydrochloric acid solution: $1 + 10$.

A.16.3 Instruments and Equipment

- A.16.3.1 Atomic absorption spectrometer.
- A.16.3.2 Instrument reference conditions: Mercury hollow cathode lamp analysis line wavelength: 253.7 nm; slit: 0.5 nm; lamp current: 6 mA.
- A.16.3.3 Carrier gas flow rate: Argon 200 mL/min.
- A.16.3.4 Atomizer temperature: Room temperature.

A.16.4 Analytical Procedure

A.16.4.1 Microwave Digestion

Weigh about 0.1 g of sample (accurate to 0.001 g), place it in a digestion vessel, add 10 mL of nitric acid and 2 mL of hydrogen peroxide. After closing the safety valve, place the digestion vessel in a microwave oven. Raise the temperature to 130°C within 10 min, hold for 2 min, then raise to 150°C within 5 min, hold for 3 min, then raise to 180°C within 5 min, and hold for 10 min. After complete cooling, transfer the sample to a 25 mL volumetric flask (if turbid, precipitated, or containing mechanical impurities, filter it), and dilute it to volume with hydrochloric acid solution.

A.16.4.2 Reflux Digestion

Refer to the reflux digestion method in Method Two (Cold Atomic Absorption Spectrometry) of GB/T 5009.17-2003. Concurrently prepare a blank solution using the same method as a blank reference liquid.

A.16.4.3 Determination

Turn on the instrument. After the instrument and mercury hollow cathode lamp are fully preheated and the baseline is stable, use sodium borohydride solution as the hydride reduction generator. Inject samples sequentially following computer instructions: standard blank, standard solutions, sample blank, and sample solution. After testing, the computer automatically generates the working curve and the mercury concentration in the sample solution after subtracting the sample blank. Input sample information (such as name, sample mass, dilution volume, etc.), and the mercury content in the sample is automatically calculated. The absolute difference between parallel measurement results shall not be greater than 0.1 mg/kg, and the arithmetic mean of the results is taken as the determination result.

Appendix B

(Normative Appendix)

Preparation Method of Titanium Trichloride Standard Volumetric Solution

B.1 Reagents and Materials

- B.1.1 Hydrochloric acid.
- B.1.2 Ferrous ammonium sulfate.
- B.1.3 Ammonium thiocyanate solution: 200 g/L.
- B.1.4 Sulfuric acid solution: $1 + 1$.
- B.1.5 Ferric chloride solution.
- B.1.6 Potassium dichromate standard volumetric solution: $c(1/6\mathrm{K_2Cr_2O_7}) = 0.1$ mol/L, prepared and calibrated according to GB/T 602.

B.2 Instruments and Equipment

See Figure A.1.

B.3 Preparation of Titanium Trichloride Standard Volumetric Solution

B.3.1 Preparation

Take 100 mL of ferric chloride solution and 75 mL of hydrochloric acid, place in a 1000 mL brown volumetric flask, dilute to the mark with water that has been boiled and cooled to room temperature, mix well, pour immediately into a light-protected lower-outlet bottle, and store under carbon dioxide gas protection.

B.3.2 Calibration

Weigh about 3 g (accurate to 0.0001 g) of ferrous ammonium sulfate, place in a 500 mL conical flask. Under the protection of a carbon dioxide gas stream, add 50 mL of boiled and cooled water to dissolve it, then add 25 mL of sulfuric acid solution. Continue passing a carbon dioxide gas stream below the liquid surface for protection, quickly and accurately add 35 mL of potassium dichromate standard volumetric solution, then titrate with the titanium trichloride standard solution to be calibrated until close to the calculated endpoint. Immediately add 25 mL of ammonium thiocyanate solution and continue titrating with the titanium trichloride standard solution until the red color turns green, which is the endpoint. The entire titration process should be operated under carbon dioxide gas protection while conducting a blank test simultaneously.

B.3.3 Calculation of Results

The concentration of the titanium trichloride standard solution, expressed as $c(\mathrm{TiCl_3})$ in moles per liter (mol/L), is calculated according to formula (B.1):

$$c(\mathrm{TiCl_3}) = \frac{c_3 V_4}{V_5 - V_6} \tag{B.1}$$

Where:

- c_3 — Exact concentration of the potassium dichromate standard volumetric solution, in moles per liter (mol/L);
- V_4 — Exact volume of potassium dichromate standard volumetric solution, in milliliters (mL);
- V_5 — Exact volume of titanium trichloride standard volumetric solution consumed to titrate the titanium oxidized by the potassium dichromate standard volumetric solution, in milliliters (mL);
- V_6 — Exact volume of titanium trichloride standard volumetric solution consumed in the blank titration, in milliliters (mL).

The calculation result is expressed to four decimal places. The above calibration must be performed immediately when analyzing samples.

Appendix C

(Normative Appendix)

Preparation Method of Barium Chloride Standard Solution

C.1 Reagents and Materials

- C.1.1 Barium chloride.
- C.1.2 Aqueous ammonia.
- C.1.3 Sulfuric acid standard volumetric solution: $c(1/2\mathrm{H_2SO_4}) = 0.1$ mol/L, prepared and calibrated according to GB/T 601.

- C.1.4 Sodium rhodizonate indicator solution (weigh 0.1 g of sodium rhodizonate, dissolve in 10 mL of water, prepare before use).
- C.1.5 Broad-range pH test paper.

C.2 Preparation

Weigh 12.25 g of barium chloride, dissolve in 500 mL of water, transfer to a 1000 mL volumetric flask, dilute to the mark, and mix well.

C.3 Calibration Method

Pipette 20 mL of sulfuric acid standard volumetric solution into a 250 mL conical flask, add 50 mL of water, and neutralize with aqueous ammonia until broad-range pH test paper shows pH 8. Then titrate with the barium chloride standard volumetric solution, using sodium rhodizonate indicator solution as an external indicator. The endpoint is reached when the reaction liquid and indicator solution intersect on filter paper to form a rose-red spot that persists for 2 min without fading.

C.4 Calculation of Results

The concentration of the barium chloride standard volumetric solution, expressed as $c(1/2\mathrm{BaCl_2})$ in moles per liter (mol/L), is calculated according to formula (C.1):

$$c\left(\frac{1}{2}\mathrm{BaCl_2}\right) = \frac{c_1 V_4}{V_5}$$

(C.1)

Where:

- c_1 — Exact concentration of the sulfuric acid standard volumetric solution, in moles per liter (mol/L);
- V_4 — Exact volume of the sulfuric acid standard volumetric solution, in milliliters (mL);
- V_5 — Exact volume of barium chloride standard volumetric solution consumed, in milliliters (mL).

The calculation result is expressed to four decimal places.

Appendix D

(Informative Appendix)

Schematic Diagram of Sunset Yellow Liquid Chromatography and Retention Times of Components

D.1 The schematic diagram of Sunset Yellow liquid chromatography is shown in Figure

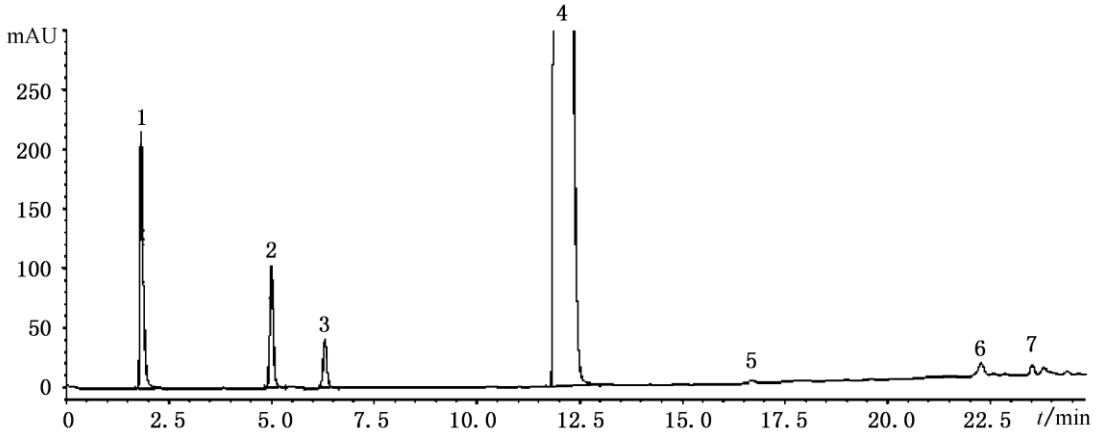

D.1

(Component identification corresponding to Figure D.1):

1. Sodium sulfanilate;
2. Disodium salt of 4,4'-(diazoamino)dibenzenesulfonic acid;
3. Sodium 2-naphthol-6-sulfonate;
4. Sunset Yellow;
5. Disodium 6,6'-oxybis(2-naphthalenesulfonate);
6. 1-(Phenylazo)-2-naphthol;
7. Unknown substance.

D.2 The retention times of each component of Sunset Yellow are shown in Table D.1

Table D.1 Retention Times of Sunset Yellow Components

Peak Number	**Component Name**	**Retention Time / min**
1	Sodium sulfanilate	1.83
2	Disodium salt of 4,4'-(diazoamino)dibenzenesulfonic acid	4.99
3	Sodium 2-naphthol-6-sulfonate	6.29
4	Sunset Yellow	11.92
5	Disodium 6,6'-oxybis(2-naphthalenesulfonate)	16.21

Peak Number	Component Name	Retention Time / min
6	1-(Phenylazo)-2-naphthol	21.86

Note: Retention times of components may vary with different instruments, separation columns, and even injection times, but the elution order of each component remains unchanged.

END UNOFFICIAL TRANSLATION

10. Amendments to GB 28307-201 2 National Food Safety Standard — Food Additive: Maltitol and Maltitol Solution

Amendment No. 1

1) "A.5.2.1 Alkaline copper citrate test solution: Weigh 2.5 g of copper sulfate, 5.4 g of citric acid, and 1.4 g of anhydrous sodium carbonate, dilute with water to 100 mL."

Is modified to:

"A.5.2.1 Alkaline copper citrate test solution: Weigh 2.5 g of copper sulfate, 5.0 g of citric acid, and 14.4 g of anhydrous sodium carbonate, dilute with water to 100 mL."

2) "A.5.2.3 Iodine standard volumetric solution: 0.025 mol/L."

Is modified to:

"A.5.2.3 Iodine standard volumetric solution $c\left(\frac{1}{2}\mathrm{I}_2\right) = 0.05$ mol/L."

Amendment No. 2

1) Add the following “Note” to Table 2 under “4.2 Physicochemical Indices”

"Note: Commercialized maltitol products shall use maltitol complying with this standard as raw material, and may add silicon dioxide, a food additive complying with national food safety standards. For commercialized products, except for sulfated ash, all other indices shall comply with the provisions of this standard."

2) Under “A.4.2.3 Calculation of Results”

Change "the ratio of the absolute difference between two independent determination results obtained under repeatability conditions to their arithmetic mean shall not exceed 1%".

to:

"The ratio of the absolute difference between two independent determination results obtained under repeatability conditions to their arithmetic mean shall not exceed 5%".

BEGIN UNOFFICIAL TRANSLATION

GB 28307-2012 National Food Safety Standard Food Additive — Maltitol and Maltitol: Solution

Issued on: April 25, 2012

Implemented on: June 25, 2012

Published by the Ministry of Health of the People's Republic of China

1 Scope

This standard applies to the food additive maltitol, and maltitol solution produced from starch as raw material through processes such as liquefaction, saccharification, hydrogenation, and purification.

2 Chemical Name, Molecular Formula, and Relative Molecular Mass

2.1 Chemical Name

4-O-α-D-glucopyranosyl-D-sorbitol

2.2 Molecular Formula

$$C_{12}H_{24}O_{11}$$

2.3 Relative Molecular Mass

344.31 (based on the 2007 international relative atomic masses)

3 Product Classification

3.1 Maltitol

3.1.1 Maltitol (Type I)

High-purity crystalline product.

3.1.2 Maltitol (Type II)

Non-crystalline solid product obtained by direct drying of maltitol solution.

3.2 Maltitol Solution

A liquid mixture composed of a large amount of maltitol and a small amount of sorbitol, oligosaccharide alcohols, and polyol polymers.

4 Technical Requirements

4.1 Sensory Requirements: Must comply with the provisions of Table 1

.

Table 1 Sensory Requirements

Item	Maltitol (Type I)	Maltitol (Type II)	Maltitol Solution	Test Method
Color and State	White to near-white crystalline powder	White to near-white powder	Colorless viscous liquid	Take an appropriate amount of sample, place it in a clean, dry white porcelain dish or beaker, observe its color and texture/state under natural light, and smell (taste) its flavor.
Odor	Odorless	Odorless	Odorless, with a cooling and sweet taste	

4.2 Physicochemical Indices: Must comply with the provisions of Table 2

Table 2 Physicochemical Indices

Item	Maltitol (Type I)	Maltitol (Type II)	Maltitol Solution	Test Method
Maltitol content (calculated on dry basis), $w/\% \geq$	98.0	50.0	50.0	Appendix A, A.3
Sorbitol (calculated on dry basis), $w/\% \leq$	1.0	8.0	8.0	Appendix A, A.3
Reducing sugars (calculated as glucose), $w/\% \leq$	0.1	1.0	32.0	Appendix A, A.4

Item	Maltitol (Type I)	Maltitol (Type II)	Maltitol Solution	Test Method
Sulfated ash, $w/\% \leq$	0.1	0.3	0.3	Appendix A, A.5
Specific optical rotation (20°C,D) / [$^\circ \cdot dm^2 \cdot kg^{-1}$]	+105.5 to +108.5	0.1	0.1	Appendix A, A.6
Sulfates (calculated as SO_4), / (mg/kg) ≤	100	100	100	Appendix A, A.7
Water, $w/\% \leq$	1.0	1.0	—	Appendix A, A.8
Chlorides (calculated as Cl), / (mg/kg) ≤	50	50	50	Appendix A, A.9
Nickel (calculated as Ni), / (mg/kg) ≤	2	2	2	GB/T 5009.13 Colorimetric method
Total arsenic (calculated as As), / (mg/kg) ≤	3	3	3	GB/T 5009.11
Lead (Pb), / (mg/kg) ≤	1	1	1	GB 5009.12

(Note: Pursuant to Amendment No. 2, commercialized maltitol products shall use maltitol complying with this standard as raw material, and may add silicon dioxide, a food additive complying with national food safety standards. For commercialized products, except for sulfated ashes, all other indices shall comply with the provisions of this standard).

Appendix A

Test Methods

A.1 General Provisions

Unless other requirements are specified, the reagents and water used in this standard refer to analytical purity reagents and grade-three water specified in GB/T 6682-2008. Standard volumetric solutions, standard solutions for impurity determination, preparations, and products used in the tests shall be prepared in accordance with GB/T 601, GB/T 602, and GB/T 603, unless otherwise specified. When no solvent is specified for a solution used in the tests, it refers to an aqueous solution.

A.2 Identification Test

A.2.1 Reagents and Materials

- A.2.1.1 Water: GB/T 6682-2008, grade-one water.
- A.2.1.2 Maltitol reference standard: Mass fraction $\geq 99.0\%$.

A.2.2 Instruments and Equipment

- A.2.2.1 High-performance liquid chromatograph: Equipped with a refractive index detector or other equivalent detectors.
- A.2.2.2 Mobile phase vacuum filtration and degassing device and 0.22μm filter membrane.
- A.2.2.3 Chromatographic column: A column packed with calcium-type strongly acidic cation exchange resin dedicated to sugar or sugar alcohol analysis (column dimensions: 7.8 mm × 300 mm) or an equivalent chromatographic column.

A.2.3 Reference Chromatographic Conditions

- A.2.3.1 Mobile phase: GB/T 6682-2008, grade-one water.
- A.2.3.2 Column temperature: $80°C$.
- A.2.3.3 Mobile phase flow rate: Approx. 0.5 mL/min.
- A.2.3.4 Injection volume: 20μL.

A.2.4 Analytical Procedure

A.2.4.1 Preparation of Standard Solution

Weigh about 0.1 g (accurate to 0.001 g) of the maltitol reference standard, dissolve with the mobile phase, transfer to a 10 mL volumetric flask, dilute to volume with the mobile phase, and filter the resulting solution through a 0.22μm filter membrane. The filtrate is ready for use.

A.2.4.2 Preparation of Sample Solution

Weigh about 0.1 g of the sample (accurate to 0.0001 g), dissolve with the mobile phase, transfer to a 10 mL volumetric flask, dilute to volume with the mobile phase, and filter the resulting solution through a 0.22μm filter membrane. The filtrate is ready for use.

A.2.4.3 Detection and Determination of Results

Under the reference chromatographic conditions specified in A.2.3, measure the standard solution and sample solution respectively. The primary peak of the sample solution shall have the same retention time as the primary peak of the reference standard.

A.3 Determination of Maltitol and Sorbitol Contents

A.3.1 Reagents and Materials

- A.3.1.1 Water: GB/T 6682-2008, grade-one water.
- A.3.1.2 Maltitol and sorbitol reference standards: Purity shall be above 99.0%. Prepare 6 standard solution series of different concentrations within the range of 0.1 mg/mL to 10 mg/mL using each reference standard.

A.3.2 Instruments and Equipment

- A.3.2.1 High-performance liquid chromatograph: Equipped with a refractive index detector or other equivalent detectors.
- A.3.2.2 Mobile phase vacuum filtration and degassing device and 0.22μm filter membrane.
- A.3.2.3 Chromatographic column: A column packed with calcium-type strongly acidic cation exchange resin dedicated to sugar or sugar alcohol analysis (column dimensions: 7.8 mm × 300 mm) or an equivalent chromatographic column.
- A.3.2.4 Analytical balance: Precision 0.1 mg.
- A.3.2.5 Micro-syringe: 50μL.

A.3.3 Reference Chromatographic Conditions

- A.3.3.1 Mobile phase: GB/T 6682-2008, grade-one water.
- A.3.3.2 Column temperature: 80°C.
- A.3.3.3 Mobile phase flow rate: Approx. 0.5 mL/min.
- A.3.3.4 Injection volume: 20μL. (Note: System suitability requires injecting the standard solution twice repeatedly, with a relative error of the obtained response areas of less than 2.0%).

A.3.4 Analytical Procedure

A.3.4.1 Preparation of Sample Solution

Take about 0.1 g of the sample (calculated on a dry matter basis, such that the component contents of various sugar alcohols fall within the range of the standard solution series; otherwise, the sample size can be appropriately increased or decreased), weigh accurately to 0.0001 g, dissolve with the mobile phase, transfer to a 10 mL volumetric flask, dilute to volume with the mobile phase, and filter the resulting solution through a 0.22μm filter membrane. The filtrate is ready for use.

A.3.4.2 Plotting the Standard Curve

After injecting the standard solutions of maltitol and sorbitol respectively, plot a standard curve of peak area versus standard concentration. The linear correlation coefficient shall be 0.9990 or higher.

A.3.5 Sample Determination

Inject the prepared sample solution. Identify the chromatographic peaks of various sugar alcohol components in the sample based on the retention times of the reference standards. Calculate the percentage content of each sugar alcohol from the sample peak area using the external standard method or area normalization method (for liquids).

A.3.6 Calculation of Results by External Standard Method

The maltitol or sorbitol content is expressed as the mass fraction (w_i) of maltitol or sorbitol (relative to dry matter), expressed in %, and calculated according to formula (A.1):

$$w_i = \frac{A_i m_s V}{A_s m V_s} \times 100\%$$

(A.1)

Where:

- A_i — Peak area of a certain sugar alcohol in the sample;
- m_s — Numerical value of the mass of sugar alcohol reference standard in the standard sample, in grams (g);
- V — Numerical value of the dilution volume of the sample, in milliliters (mL);
- A_s — Peak area of the sugar alcohol reference standard in the standard sample;
- m — Numerical value of the sample mass (calculated on a dry matter basis), in grams (g);
- V_s — Numerical value of the dilution volume of the standard sample, in milliliters (mL).

(Note: The external standard method is the arbitration method). The experimental results are based on the arithmetic means of parallel determination results. The ratio of the absolute difference between two independent determination results obtained under repeatability conditions to their arithmetic mean shall not exceed 2%.

A.4 Determination of Water

A.4.1 Karl Fischer Method (Arbitration Method)

Determined according to the Karl Fischer method in GB 5009.3.

A.4.2 Direct Drying Method

A.4.2.1 Instruments and Equipment

- A.4.2.1.1 Electric drying oven.
- A.4.2.1.2 Analytical balance: Sensitivity 0.1 mg.
- A.4.2.1.3 Weighing bottle: 70 mm × 35 mm.
- A.4.2.1.4 Desiccator: Using color-changing silica gel as desiccant.

A.4.2.2 Analytical Procedure

Weigh 1 g of sample, accurate to 0.0002 g, placed in a weighing bottle previously dried to constant mass. Cover, gently rotate to spread the sample into a thin layer, and place the weighing bottle containing the sample along with its removed lid into the drying oven. Dry in an electric drying oven at $105^{\circ}C \pm 2^{\circ}C$ for 3 h for solids and 5 h for liquids. Transfer to a desiccator to cool. Weigh after 30 min.

A.4.2.3 Calculation of Results

Water is expressed as mass fraction (w_2), in %, and calculated according to formula (A.2):

$$w_2 = \frac{m_1 - m_2}{m_1 - m} \times 100\%$$

(A.2)

Where:

- m_1 — Mass of the bottle plus sample before drying, in grams (g);
- m_2 — Mass of the bottle plus sample after drying, in grams (g);
- m — Mass of the empty weighing bottle dried to constant mass, in grams (g).

The experimental results are based on the arithmetic means of parallel determination results. Pursuant to Amendment No. 2, the ratio of the absolute difference between two independent determination results obtained under repeatability conditions to their arithmetic mean shall not exceed 5%.

A.5 Determination of Reducing Sugars

A.5.1 Instruments and Equipment

- A.5.1.1 Analytical balance.
- A.5.1.2 Iodine flask.

A.5.2 Reagents and Materials

- A.5.2.1 Alkaline copper citrate test solution: Weigh 2.5g of copper sulfate, 5.0 g of citric acid, and 14.4 g of anhydrous sodium carbonate, and dilute with water to 100 mL. *(Note: Modified by Amendment No. 1)*
- A.5.2.2 Acetic acid solution: $2 + 3$.
- A.5.2.3 Iodine standard volumetric solution: $c\left(\frac{1}{2}\mathrm{I}_2\right) = 0.05$ mol/L. *(Note: Modified by Amendment No. 1)*
- A.5.2.4 Hydrochloric acid solution: $6 + 94$.
- A.5.2.5 Sodium thiosulfate standard volumetric solution: 0.05 mol/L.
- A.5.2.6 Starch indicator solution: 10 g/L.

A.5.3 Analytical Procedure

Weigh a certain amount of sample into an iodine flask, add 25 mL of water, and heat slowly to dissolve. Cool the solution, add 20 mL of alkaline copper citrate test solution and a few glass beads. Heat the solution for about 4 min until it starts to boil, and maintain boiling for 3 min. After rapid cooling, add 100 mL of diluted acetic acid solution and 20.0 mL of 0.05 mol/L iodine titration solution. While shaking the solution, add 25 mL of dilute hydrochloric acid solution. When the precipitate dissolves, titrate the excess iodine solution with 0.05 mol/L sodium thiosulfate titration solution. Near the titration endpoint, add 2 mL of 1% starch indicator. The volume of 0.05 mol/L sodium thiosulfate titration solution consumed shall be no less than 12.8 mL.

A.5.4 Result Judgment

- A.5.4.1 Weigh 10 g (liquid products calculated on dry basis) of sample; the titration consumes no less than 12.8 mL of 0.05 mol/L sodium thiosulfate, meeting the reducing sugar standard of $\leq 0.1\%$.
- A.5.4.2 Weigh 5 g (liquid products calculated on dry basis) of sample; the titration consumes no less than 12.8 mL of 0.05 mol/L sodium thiosulfate, meeting the reducing sugar standard of $\leq 0.2\%$.
- A.5.4.3 Weigh 3.3 g (liquid products calculated on dry basis) sample; the titration consumes no less than 12.8 mL of 0.05 mol/L sodium thiosulfate, meeting the reducing sugar standard of $\leq 0.3\%$.

A.6 Determination of Sulfated Ash

A.6.1 Instruments and Equipment

High-temperature furnace.

A.6.2 Reagents and Materials

Sulfuric acid.

A.6.3 Analytical Procedure

Weigh 1 g of sample (accurate to 0.0001 g), place it in a porcelain crucible previously ignited to constant mass, gently heat on an electric furnace until completely carbonized, and cool to room temperature. Add 0.5 mL of sulfuric acid to moisten, and heat at low temperature until sulfuric acid vapor is completely expelled. Then transfer to a high-temperature furnace at $800°C \pm 25°C$ and ignite to constant mass.

A.6.4 Calculation of Results

Sulfated ash is expressed as mass fraction (w_3), in %, and calculated according to formula (A.3):

$$w_3 = \frac{m_4 - m_5}{m_3 - m_5} \times 100\%$$

(A.3)

Where:

- m_4 — Mass of porcelain crucible and residue after ignition, in grams (g);
- m_5 — Mass of empty crucible, in grams (g);
- m_3 — Mass of sample plus empty crucible, in grams (g).

The experimental results are based on the arithmetic means of parallel determination results. The ratio of the absolute difference between two independent determination results obtained under repeatability conditions to their arithmetic mean shall not exceed 1%.

A.7 Determination of Specific Optical Rotation

A.7.1 Reagents and Materials

Ammonia solution: Take 400 mL of concentrated ammonia water, transfer to a 1000 mL volumetric flask, dilute with water to the mark, and mix well.

A.7.2 Instruments and Equipment

Automatic polarimeter: Precision $0.01\ (\circ) \cdot \mathrm{dm}^2 \cdot \mathrm{kg}^{-1}$.

A.7.3 Analytical Procedure

Weigh 5 g of sample, accurate to 0.0001 g, place in a 100 mL volumetric flask, add an appropriate amount of water to dissolve completely, add 0.4 mL of ammonia solution, dilute to the mark with water, mix well, and let stand for 1 min. Adjust room temperature and solution temperature to $20°\mathrm{C} \pm 0.5°\mathrm{C}$, rinse the polarimeter tube several times with the sample solution, slowly fill the polarimeter tube with the sample solution, and place it in the polarimeter for measurement.

A.7.4 Calculation of Results

The numerical value of specific optical rotation (20°C,D) in $[° \cdot \mathrm{dm}^2 \cdot \mathrm{kg}^{-1}]$ is calculated according to formula (A.4):

$$[\alpha](20°\mathrm{C,D}) = \frac{\alpha}{l\rho_a}$$

(A.4)

Where:

- α — Measured optical rotation angle, in degrees (°);
- l — Length of the polarimeter tube, in decimeters (dm);
- ρ_a — Mass concentration of maltitol in the solution, in grams per milliliter (g/mL).

A.8 Determination of Sulfates

A.8.1 Reagents and Materials

- A.8.1.1 Hydrochloric acid solution: Dilute 234 mL of hydrochloric acid to 1000 mL.
- A.8.1.2 Potassium sulfate standard solution: Weigh 0.181 g of potassium sulfate, place in a 1000 mL volumetric flask, add an appropriate amount of water to dissolve and dilute to the mark, mix well (1 mL is equivalent to $100\mu g$ of SO_4).

A.8.2 Instruments and Equipment

- A.8.2.1 Analytical balance: Sensitivity 0.01 g.
- A.8.2.2 Nessler colorimetric tube: 50 mL.

A.8.3 Analytical Procedure

Weigh 1 g of sample into a 50 mL Nessler colorimetric tube, add water to dissolve and dilute to 40 mL, add 2 mL of hydrochloric acid solution, mix well; this is the sample solution. Take another 50 mL Nessler colorimetric tube, add 1 mL of potassium sulfate standard solution, add water to 40 mL, add 2 mL of diluted hydrochloric acid, mix well; this is the control solution. To the sample solution and control solution, add 5 mL of 25% barium chloride solution respectively, dilute to 50 mL with water, shake thoroughly, let stand for 10 min, place both on a black background, observe from the top of the colorimetric tubes downwards, and compare the resulting turbidity.

A.8.4 Result Judgment

If the turbidity of the sample solution is lighter than that of the control solution, it is judged as compliant; if the turbidity of the sample solution is denser than that of the control solution, it is judged as non-compliant.

A.9 Determination of Chlorides

A.9.1 Reagents and Materials

- A.9.1.1 Preparation of sodium chloride standard solution: Weigh 0.165 g of sodium chloride, place in a 1000 mL volumetric flask, add an appropriate amount of water to dissolve and dilute to the mark, mix well, as stock solution. Before use, accurately pipette 10 mL of stock solution, place in a 100 mL volumetric flask, dilute with water to the mark, mix well (1 mL is equivalent to $10\mu g$ of Cl).
- A.9.1.2 Silver nitrate test solution: Take 5.0 g of silver nitrate, add an appropriate amount of water to dissolve to 1000 mL, mix well, store in a brown bottle, tightly sealed.

A.9.2 Instruments and Equipment

- A.9.2.1 Analytical balance: Sensitivity 0.01 g.

- A.9.2.2 Nessler colorimetric tube: 50 mL.

A.9.3 Analytical Procedure

Weigh 1 g of sample into a 50 mL Nessler colorimetric tube, add water to dissolve to 25 mL, add 10 mL of dilute nitric acid, add water to a volume of about 40 mL, mix well; this is the sample solution. Take another 50 mL Nessler colorimetric tube, add 5 mL of standard sodium chloride solution equivalent to 10μg of Cl, add water to dissolve to a volume of 25 mL, add 10 mL of dilute nitric acid, add water to a volume of about 40 mL, mix well; this is the control solution. To the sample solution and control solution, add 1.0 mL of silver nitrate test solution respectively, dilute with water to a volume of 50 mL, mix well, let stand in the dark for 5 min, place both on a black background, observe from the top of the colorimetric tubes downwards for the generated turbidity.

A.9.4 Result Judgment

If the turbidity of the sample solution is lighter than that of the control solution, it is judged as compliant; if the turbidity of the sample solution is denser than that of the control solution, it is judged as non-compliant.

END UNOFFICIAL TRANSLATION

Attachments:

No Attachments.